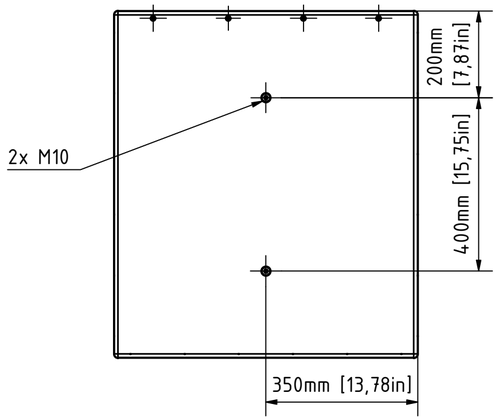

bottom view

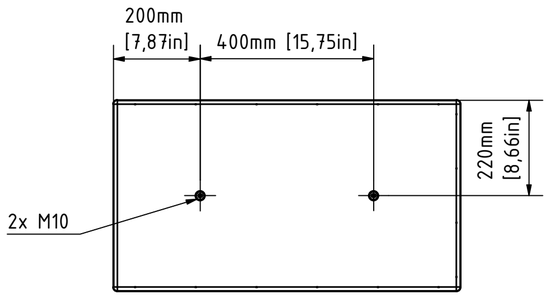

right view

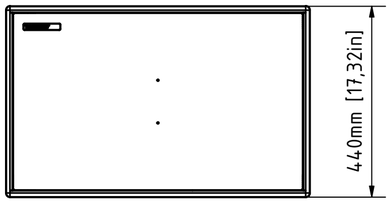

front view

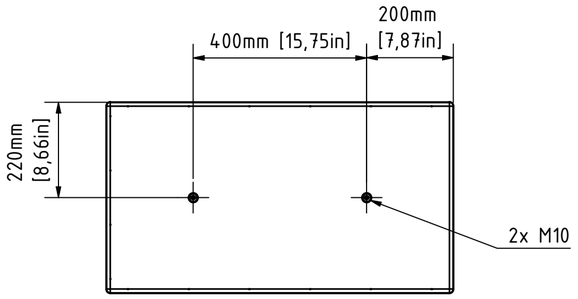

left view

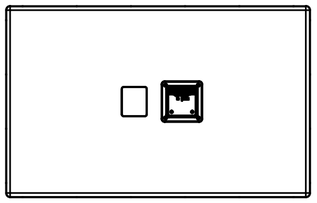

rear view

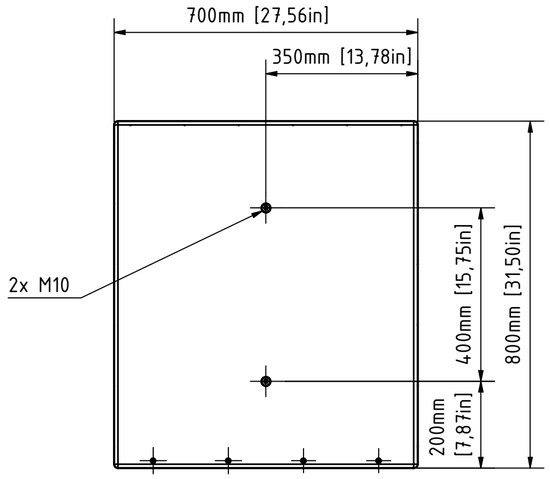

top view

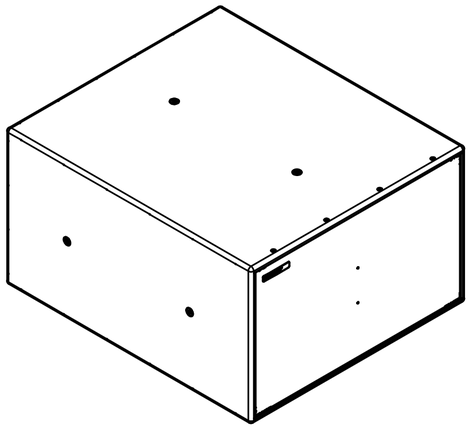

rev. no.	description	date	modified by
1	Adress modified	08.12.2021	Heike Konrad

revision process

TWAUDiO®
Karl-Hofer-Str. 42
14163 Berlin
www.twaudio.de

All rights to this drawing reserved in accordance with ISO 16016. Copying and distribution by manufacturer's permission only.

general tolerance
ISO 2768-mK
ISO 13920-BF
ISO 9013-IIA/K
according to ISO 8015

edges according to ISO 13715
surfaces (Ra)
array 2
array 3
DIN ISO 1302

scale:
weight: 36,3 kg [81 lbs]
document type: overview drawing
status type: released

	date	name
constructed:	07.12.2016	Heike Konrad
drawn:	30.10.2018	Heike Konrad
checked:		
approved:	08.12.2021	Heike Konrad

C:\CAD TW AUDIO\CAD-Daten\Produkte\B30i\B30i_kpt.iam

order number:
type: M30i
drawing number: TWA-B30i-0001
revision no.: 1
sheet: 1 | 1
A2