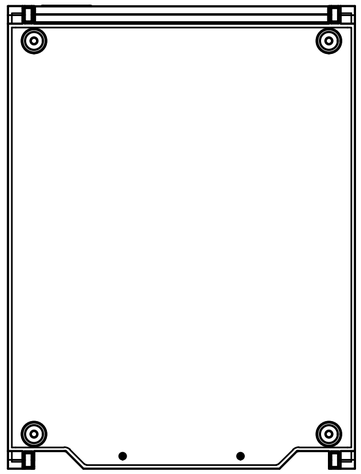

bottom view

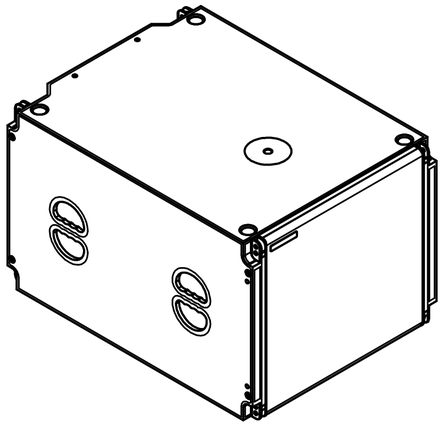

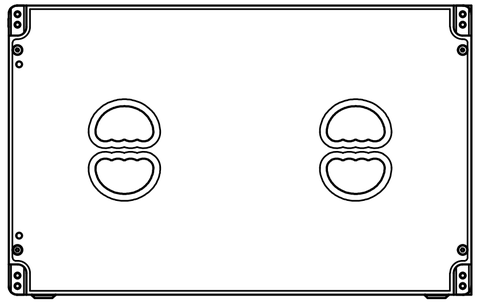

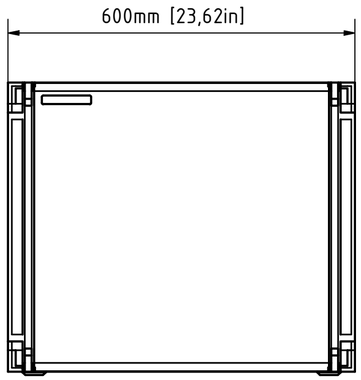

front view

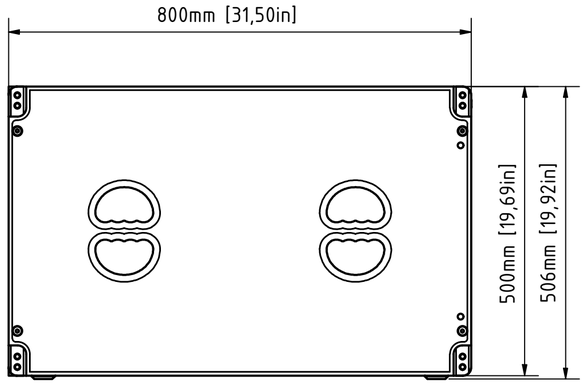

left view

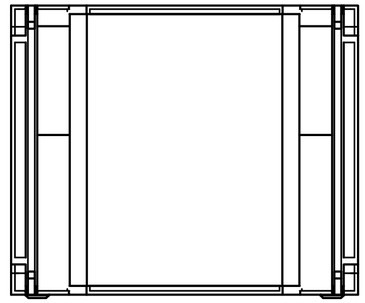

rear view

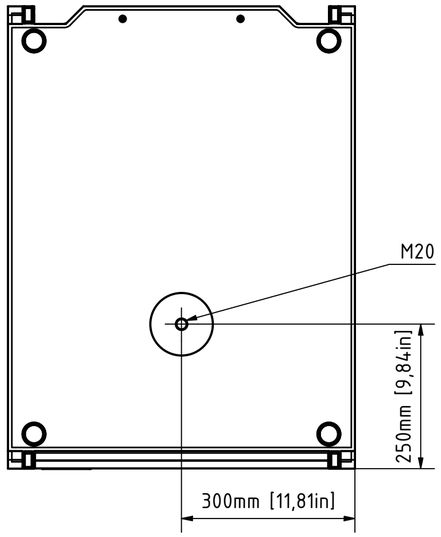

top view

rev. no.	description	date	modified by
1	Adress modified	09.12.2021	Heike Konrad

revision process

TWAUDiO®
Karl-Hofer-Str. 42
14163 Berlin
www.twaudio.de

All rights to this drawing reserved in accordance with ISO 16016. Copying and distribution by manufacturer's permission only.

general tolerance
ISO 2768-mK
ISO 13920-BF
ISO 9013-IIA/K
according to ISO 8015

edges according to ISO 13715
surfaces (Ra)
array 2
array 3
DIN ISO 1302

scale: 1:7,5 (1:10)
weight: 53 kg [117 lbs]
document type: overview drawing
status type: released

	date	name
constructed:	11.03.2016	Stefan Ullrich
drawn:	04.09.2017	Stefan Ullrich
checked:		
approved:	09.12.2021	Heike Konrad

C:\CAD TW AUDIO\CAD-Daten\Produkte\Vera532\S32-kpl.iam

order number:

type:
S32

Cardoid subwoofer

drawing number: TWA-S32-0001
revision no.: 1
sheet: 1 | 2
A2