TWAUDiO®

VERA RF600

Assembly Instructions

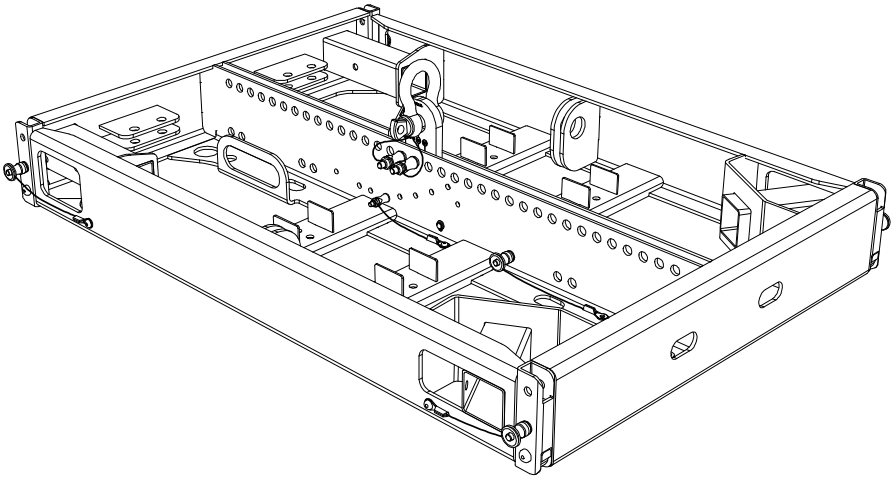

Introduction

Thank you for choosing a high-quality product “MADE IN GERMANY” from the brand TW AUDiO.

The VERA RF600 rigging frame is an accessory for the VERA20 and VERA S32 loudspeakers.

It is characterized by a subtle look, a remarkable size to weight ratio and ease of use.

If you lend your product to another party, inform that party of the safety-related operating procedures and hand over this assembly guide. If you require additional copies of this manual, you can obtain them free of charge from TW AUDiO or download them from www.twaudio.de

Instructions in this setup manual

Strictly adhere to the instructions contained in this operating manual that are marked as follows:

This symbol in combination with the signal word “Warning” identifies a potentially hazardous situation. Failure to comply with this safety instruction can lead to serious injury or even death.

This symbol in combination with the signal word “Caution” identifies a potentially hazardous situation. Failure to comply with this safety instruction can lead to light or moderate injury.

This symbol in combination with the signal word “Note” identifies a potentially hazardous situation. Failure to comply with this safety instruction can lead to product damage.

This symbol in combination with the signal word “Tip” identifies additional information or notes that will simplify working with TW AUDiO products on the basis of practical experience.

Notes on the products

Read manual before use!

Before using the rigging frame, carefully read the assembly instructions and keep the instructions in a safe place together with the VERA RF600 rigging frame.

General Information

Assembly Guide: OM-VERA RF600
Version 2.0 d, 12/2022

All information contained in this operating manual was correct to the best of our knowledge at the time of printing.

Quality warranties or assurance of suitability for a certain type of use based on the technical specifications, dimensions and weights are not granted by TWAMBO.

TWAMBO also shall not assume liability for any secondary damage (property damage and/or personal injury) nor for the failure to comply with this operating manual!

TWAMBO reserves the right to update this document based on recent developments.

TWAMBO GmbH
Karl-Hofer-Str. 42
14163 Berlin
Germany

Phone : + 49 (0) 71 41-48 89 89 0
Fax: + 49 (0) 71 41-48 89 89 99
E-Mail: info@twaudio.de
WWW: www.twaudio.de

Content

Inhalt

1. Safety | Intended use

Please adhere to the following safety instructions to avoid risks when using accessories.

The VERA RF600 rigging frame was developed for use in professional sound systems. The rigging frame may only be used by trained and qualified personnel.

Note the operating modes described in this assembly instructions. Other uses are not permissible.

Damage caused by improper use is not covered by TWAMBO.

WARNING

Before each installation, check the integrity of the VERA RF600 rigging frame and ensure that all components are in perfect condition.

The scope of delivery includes specified quick-locking pins and a load adapter with shackle. Only use this quick-locking pins and load adapter.

WARNING

The VERA RF600 rigging frame may only be used with the VERA20 and VERA S32 loudspeakers.

These assembly instructions describe how to use the VERA RF600 rigging frame. Any other use shall be deemed improper and may result in damage or even injury.

Modifications or alterations to individual parts of the VERA RF600 rigging frame and the VERA LA900 load adapter are not permitted! Danger to life!

WARNING

During and after each system setup, check that all quick-locking pins are always completely inserted! All quick-locking pins must always be used!

CAUTION

The VERA RF600 is an accessory designed both for indoor and outdoor use.

WARNING

The VERA RF600 rigging frame may only be used by trained and qualified personnel. Personnel must check the VERA RF600 for its full suitability before each use.

WARNING

When visible damage to any part of the VERA RF600 rigging frame is detected, it must be decommissioned immediately.

WARNING

Before mounting the VERA RF600 rigging frame, all attachment points – such as ceilings and crossbeams – must be checked for full load capacity and stability.

The VERA RF600 accessory is specified for a load of not more than 24 VERA20 loudspeakers or twelve VERA S32 loudspeakers. This load capacity must never be exceeded!

NOTE

When working with heavy loads exceeding 20 kg (44 lbs.), use suitable aids (dollies, hoisting slings, etc.). Multiple persons may be required depending on the situation.

WARNING

When moving (assembling, dismantling, maintaining) the VERA RF600 rigging frame with VERA20 or VERA S32 loudspeakers, ensure sufficient space to prevent collisions with other objects.

CAUTION

When installing the VERA RF600 rigging frame, be careful not to pinch or twist the power cables or other cables attached to the VERA20 or VERA S32 loudspeakers! The respective national electrotechnical regulations apply.

WARNING

All screw connections should be checked each time the VERA RF600 rigging frame is installed. Tighten all loose screws. If this is no longer possible, the screws must be replaced.

2. Overview

2.1 Scope of delivery

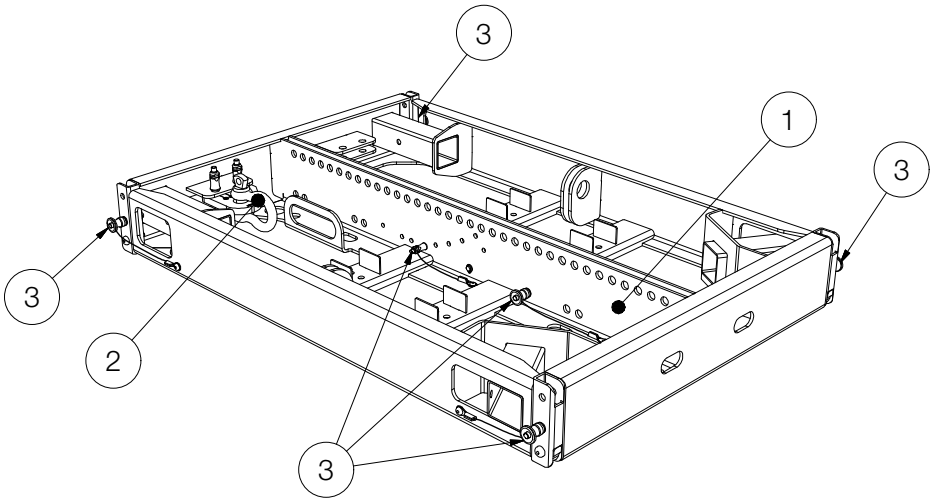

Figure 2.1 – Overview

1. VERA RF600 rigging frame – powder-coated surface
2. Load adapter with VERA LA900 shackle
3. Captive quick-locking pins

NOTE

When the VERA RF600 rigging frame is delivered from the factory, the load adapter with the VERA LA900 shackle and the quick-locking pins are in “Storage Position”.

2.2 Placement of accessories for storage on the VERA RF600

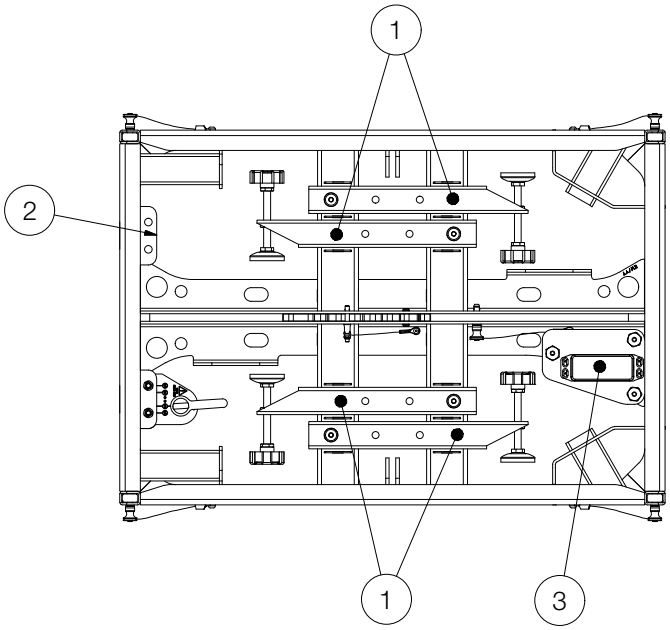

Figure 2.2 - Overview

1. VERA ORF900 Outrigger for use with the VERA RF600 as a ground frame
2. Space for additional VERA LA900 load adapter
3. Angle sensor set VERA LAS900

WARNING

For storage, first insert all quick-locking pins through the mounting holes of the VERA ORF900 outrigger set and then through the mounting holes on the VERA RF600 rigging frame.

Make sure that each outrigger is securely attached to the VERA RF600 rigging frame.

3. Technical specifications

3.1 Data sheet

Maximum load capacity	600 kg with safety factor 10 against breakage corresponds to e.g. 24 VERA20 or 12 VERA S32 units
Dimensions (h x w x d)	550 x 800 x 100 mm [19.66 x 31.50 x 3.94 in]
Weight	26,5 kg [59 lbs]
Surface	Polyurea-coated

4. Commissioning

4.1 Setup

The VERA RF600 rigging frame is designed both for standing and hanging operation. TW AUDiO provides a wide range of accessories to securely attach the rigging frame to crossbeams, motor lifts, etc. in a suspended position.

WARNING

Please note that setting up the system setups always requires two persons!

WARNING

Make sure that all system structures are located on a firm, level surface and that the surface can bear the total weight!

NOTE

TW AUDiO recommends using only the accessories specified by TW AUDiO for securing and mounting the rigging frame.

4.2 Preparing the VERA ORF900 outrigger set

NOTE

The VERA ORF900 consists of four outriggers with spindle feet and quick-locking pins.
Screw all spindle feet of the VERA ORF900 outrigger set to the position indicated in figure 4.2.

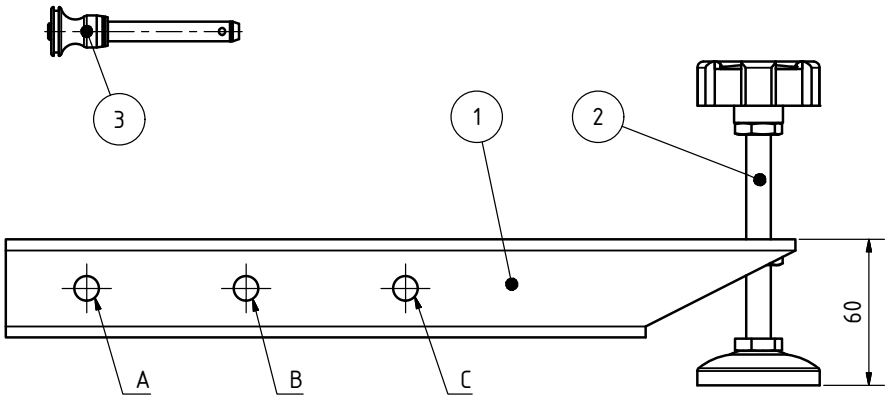

Figure 4.2 – VERA ORF900 Outrigger

1. Outrigger
2. Spindle foot
3. Quick-locking pin

4.3 Assembly (rear): VERA ORF900 outrigger attached to VERA RF600

WARNING

1. Insert the first outrigger into the square tube on the VERA RF600 rigging frame at the rear left position. Attach the outrigger to the rigging frame by means of a quick-locking pin. If possible, use the outermost mounting hole A on the outrigger.

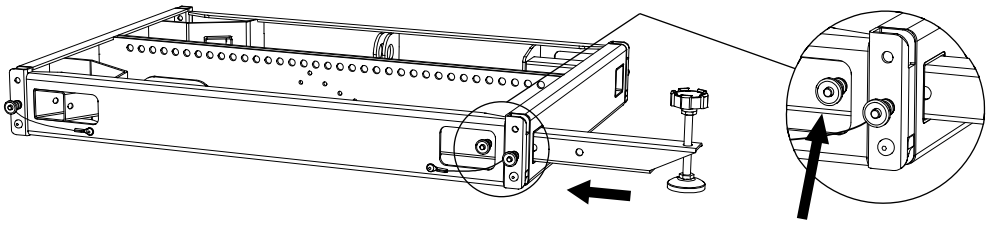

Figure 4.3.1 – Rear-mounting the VERA ORF900 outrigger on the VERA RF600

WARNING

2. Insert the second outrigger into the square tube on the VERA RF600 rigging frame at the rear right position. Attach the outrigger to the rigging frame by means of a quick-locking pin. If possible, use the outermost mounting hole A on the outrigger.

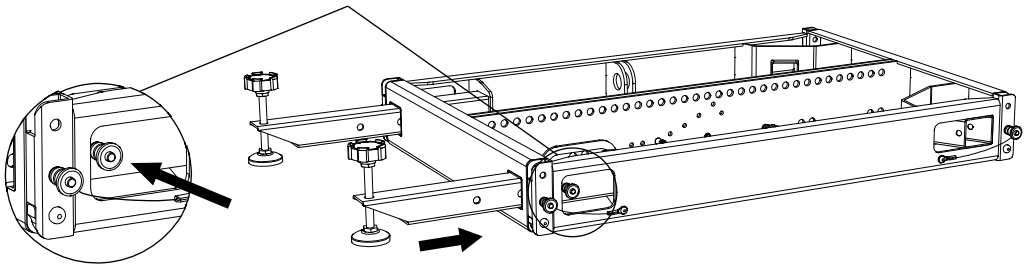

Figure 4.3.2 – Rear-mounting the VERA ORF900 outrigger on the VERA RF600

WARNING

3. Always insert all quick-locking pins completely through all square tubes (see Figure 4.3.3 right).

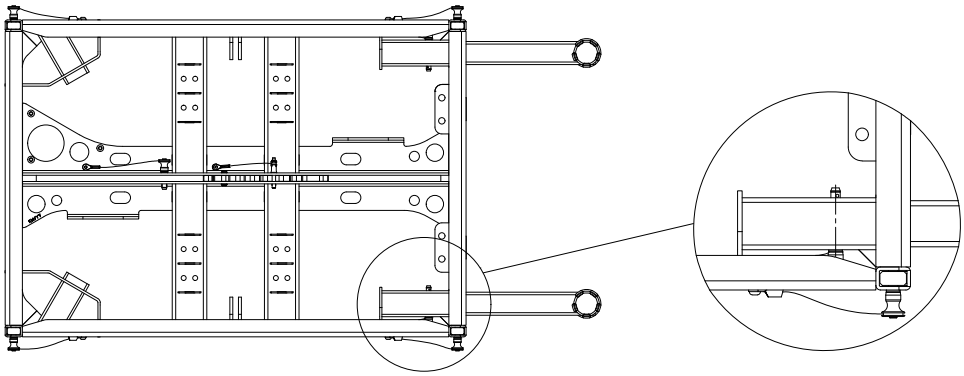

Figure 4.3.3 – Rear-mounting the VERA ORF900 outrigger on the VERA RF600

4.4 Assembly (front): VERA ORF900 outrigger attached to VERA RF600

WARNING

1. Insert the third outrigger into the square tube on the VERA RF600 rigging frame at the front left position. Attach the outrigger to the rigging frame by means of a quick-locking pin. If possible, use the outermost mounting hole A on the outrigger.

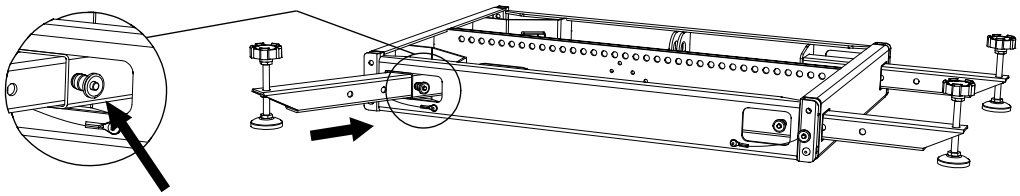

Figure 4.4.1 – Front-mounting the VERA ORF900 outrigger on the VERA RF600

WARNING

2. Insert the fourth outrigger into the square tube on the VERA RF600 rigging frame at the front right position. Attach the outrigger to the rigging frame by means of a quick-locking pin. If possible, use the outermost mounting hole A on the outrigger.

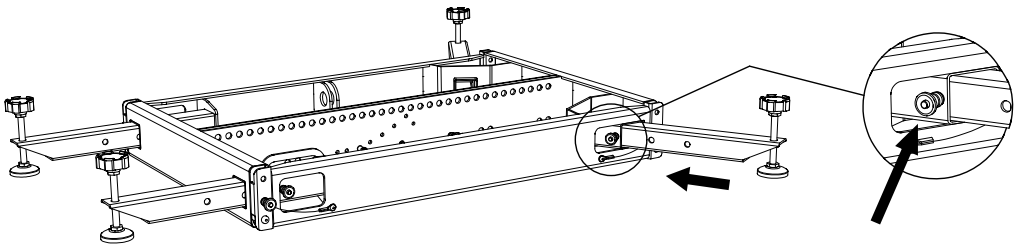

Figure 4.4.2 – Front-mounting the VERA ORF900 outrigger on the VERA RF600

WARNING

3. Always insert all quick-locking pins completely through all square tubes (see Figure 4.4.3 left).

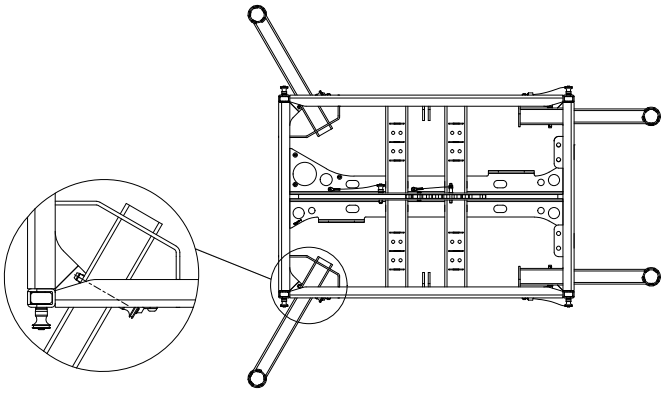

Figure 4.4.3 – Front-mounting the VERA ORF900 outrigger on the VERA RF600

4.5 Ground

WARNING

1. When setting up a system on uneven surfaces, such as gravel or grass, always put a pressure-resistant surface under all four spindle feet! Make sure that all four spindle feet rest completely on the pressure-resistant shims and that the surface can withstand the total weight. Note that depending on the system design, either the front or rear spindle feet may be able to carry more weight.

WARNING

2. Turn all four Outrigger spindle feet until the VERA RF600 rigging frame is completely lifted off the ground. The rigging frame itself must not be in contact with the ground.

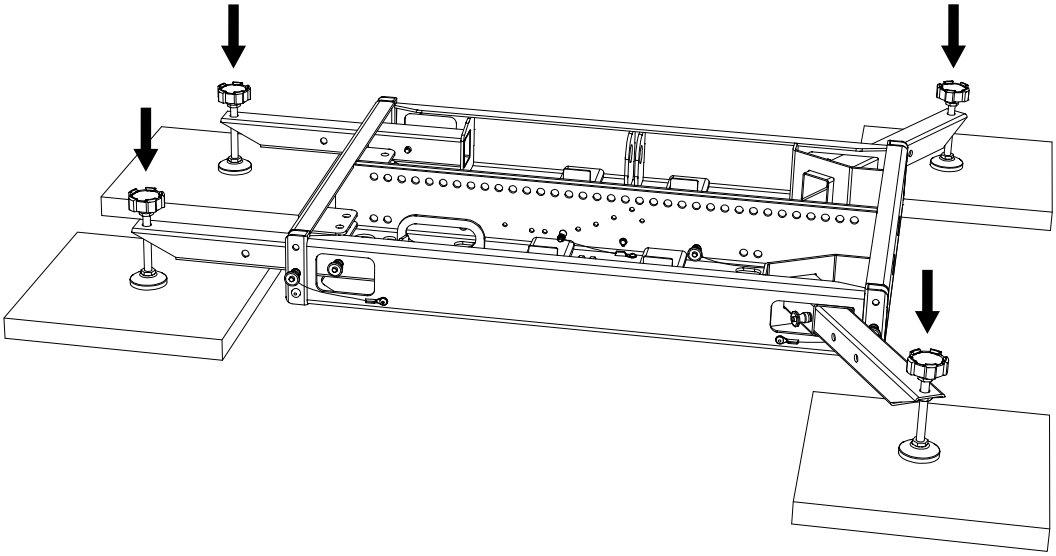

Figure 4.5.1 – Rigging frame resting only on the spindle feet

4.6 Alignment

WARNING

Always level the VERA RF600 rigging frame using a spirit level before commencing system construction. To do so, turn the spindle feet.

Make sure that the VERA RF600 rigging frame rests completely on the spindle feet.

Follow these steps:

4.6.1 Step 1: Front alignment

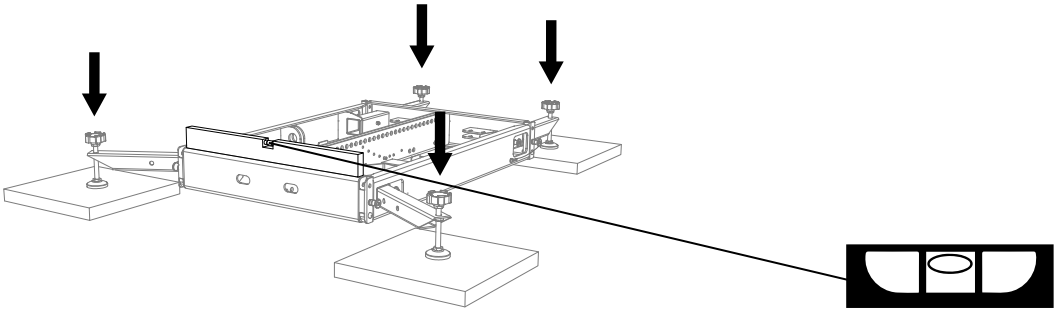

Figure 4.6.1.1 – Rigging frame front alignment

4.6.2 Step 2: Rear alignment

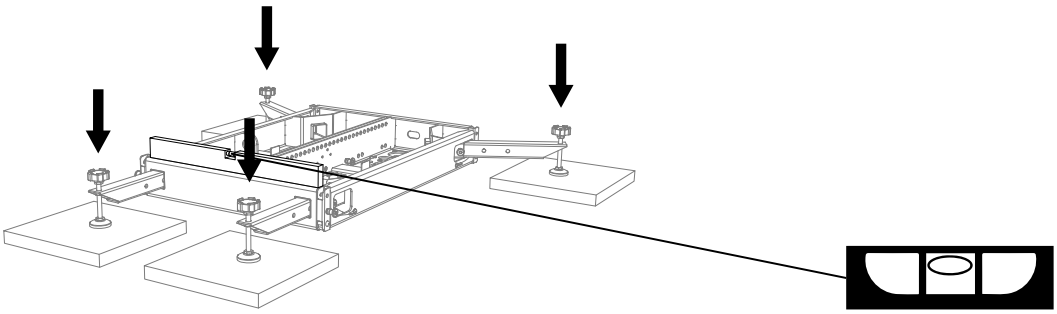

Figure 4.6.2.1 – Rigging frame rear alignment

4.6.3 Step 3: Side alignment

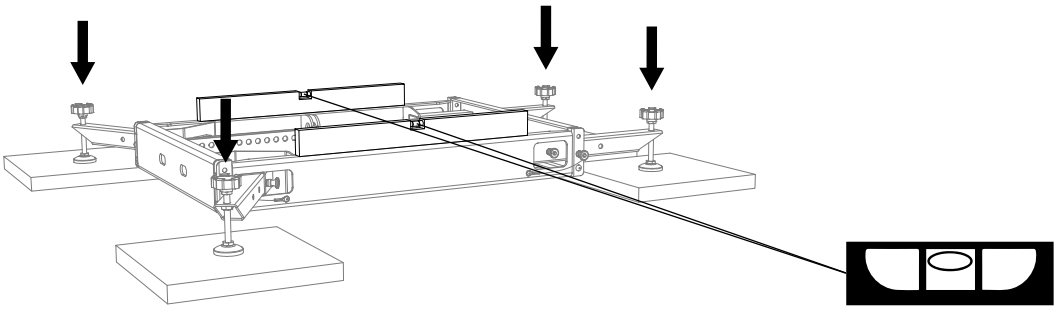

Figure 4.6.3.1 – Rigging frame side alignment

4.7 Pitfalls

WARNING

Make sure that no one can trip over your system structures, or over individual components! This is especially true for all pressure-resistant shims and spindle feet!

4.8 Danger of tipping over

WARNING

For each downtilt system structure, make sure that the tipping point never exceeds the front spindle feet!

Secure the entire downtilt system structure against tipping!

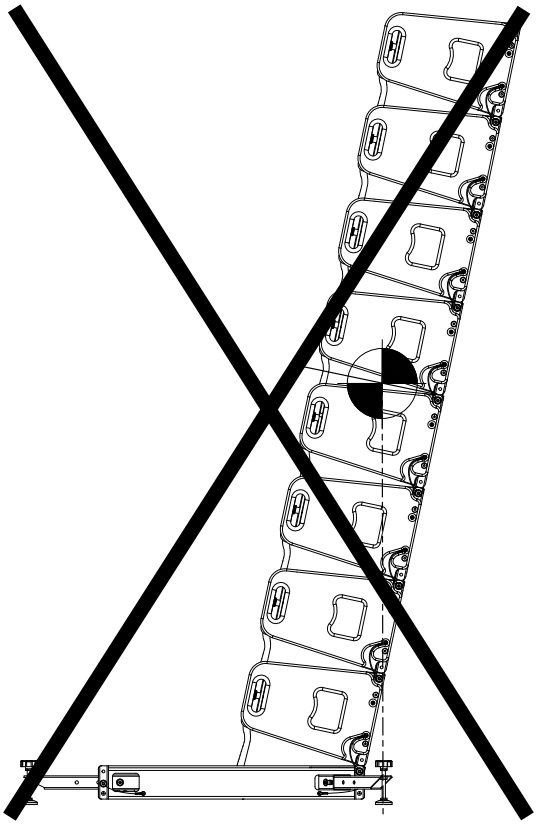

WARNING

Figure 4.8.1 - System structure – Danger of tipping

4.9 Windload

WARNING

Before setting up the system outdoors, consider unforeseeable wind conditions at the operation site!

In the event of imminent danger, dismantle your system structures immediately!

4.10 Groundstack of the lowest VERA20 speaker

The fold-out hook on the rear rigging of the lowest VERA20 loudspeaker is used to set the angle of the assembly.

Follow these steps:

NOTE

1. Loosen the two quick-locking pins at the front of the VERA20 speaker.
2. Both splay links in the front rigging rails must be extended downwards.

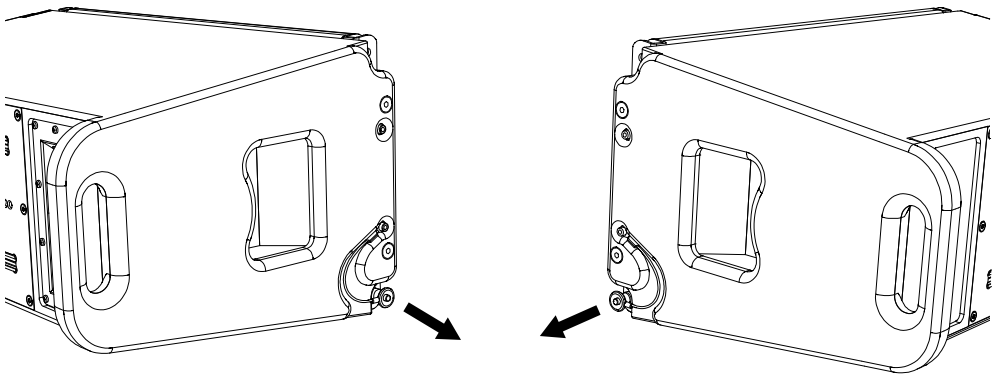

Figure 4.10.1 - Loosening quick-locking pins on the VERA20

NOTE

3. With the aid of a second person, place the VERA20 loudspeaker on the VERA RF600 rigging frame.
4. Pull back the VERA20 loudspeaker until its splay links align with the recesses of the VERA RF600 rigging frame.

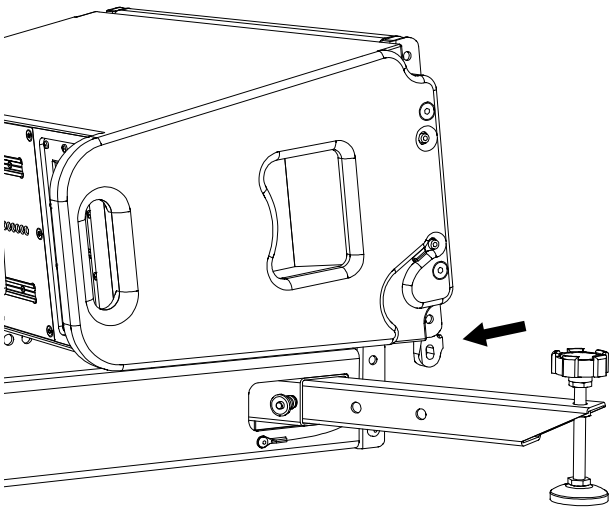

Figure 4.10.2 – Pushing back the VERA20 speaker

WARNING

5. Insert the VERA20 loudspeaker's two front quick-locking pins into the holes of the VERA RF600 rigging frame.

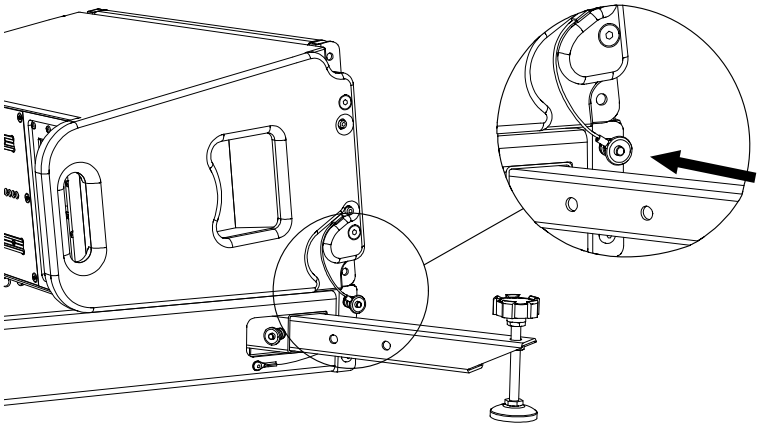

Figure 4.10.3 – Inserting the quick-locking pins

WARNING

6. Loosen the quick-locking pin on the main carrier of the VERA20 loudspeaker's back rigging and fold out the hook by 90°.

7. Lift the VERA20 speaker and pull the hook all the way down.

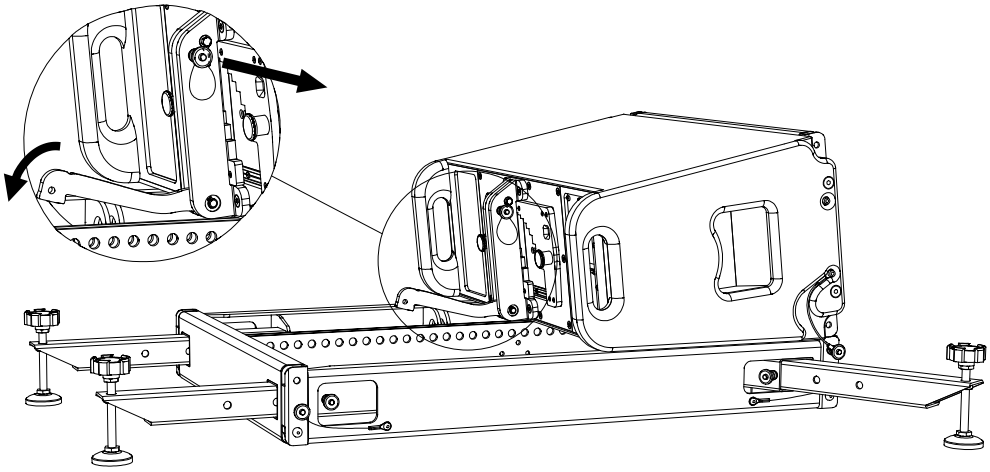

Figure 4.10.4 – Folding out the hook

WARNING

8. Select the appropriate level (number of degrees) for your system setup. See figures 4.10.5 to 4.10.11.

9. Attach the hook to the VERA RF600 rigging frame using the quick-locking pin on the rigging frame.

Variants:

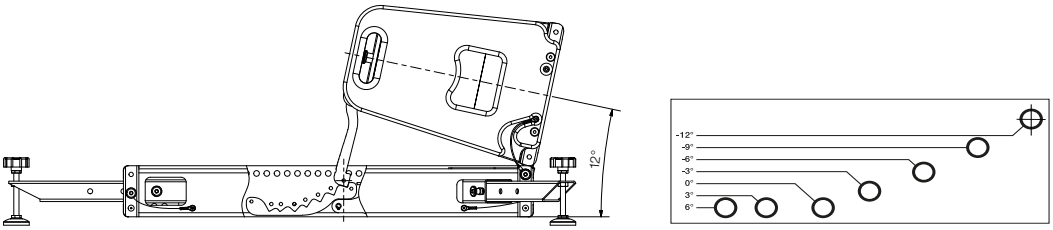

Figure 4.10.5 – VERA20 loudspeaker side view – tilted down 12°

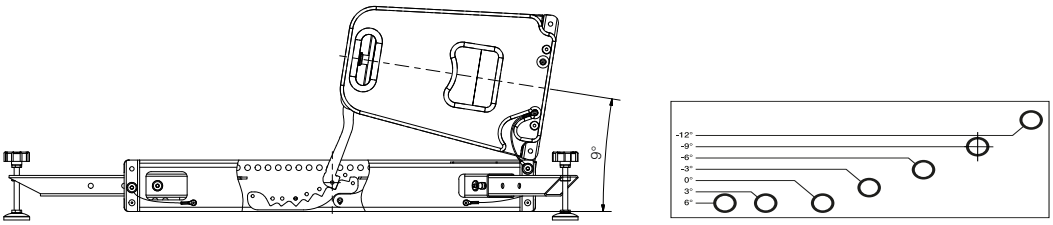

Figure 4.10.6 – VERA20 loudspeaker side view – tilted down 9°

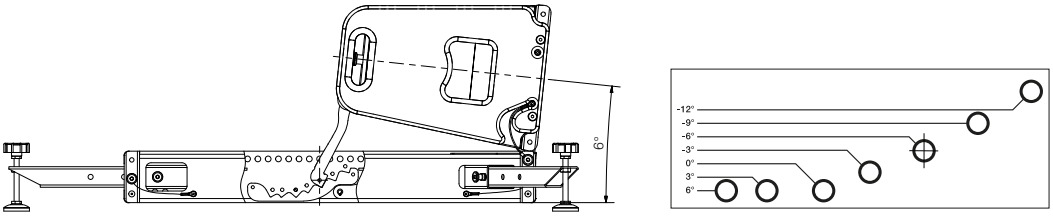

Figure 4.10.7 – VERA20 loudspeaker side view – tilted down 6°

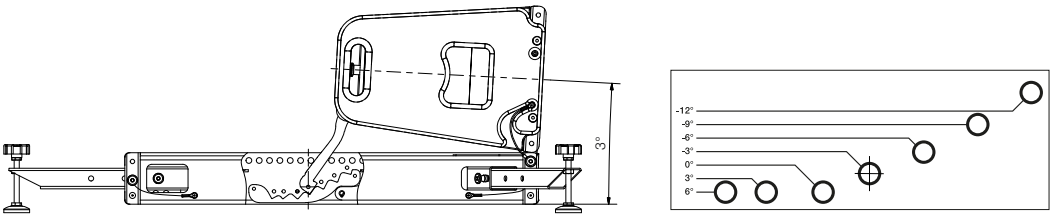

Figure 4.10.8 – VERA20 loudspeaker side view – tilted down 3°

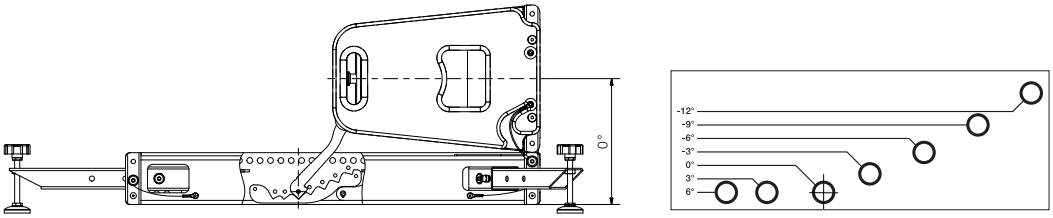

Figure 4.10.9 – VERA20 loudspeaker side view at 0° (horizontal)

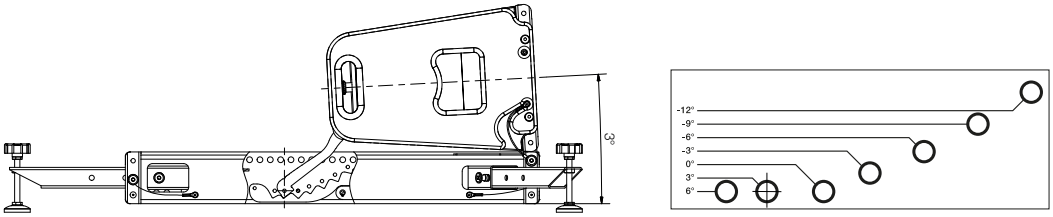

Figure 4.10.10 – VERA20 loudspeaker side view – tilted up 3°

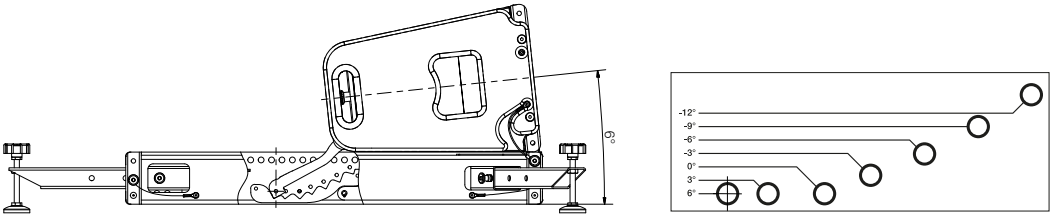

Figure 4.10.11 – VERA20 loudspeaker side view – tilted up 6°

4.11 VERA20 groundstack setup, from the 2nd speaker

To set up the ground stack array, starting from the second VERA20 loudspeaker, proceed as follows:

WARNING

1. Please note that setting up the VERA RF600 rigging frame always requires two persons!

NOTE

2. Loosen the two quick-locking pins at the front of the VERA20 speaker.
3. Both splay links in the front rigging rails must be extended downwards.

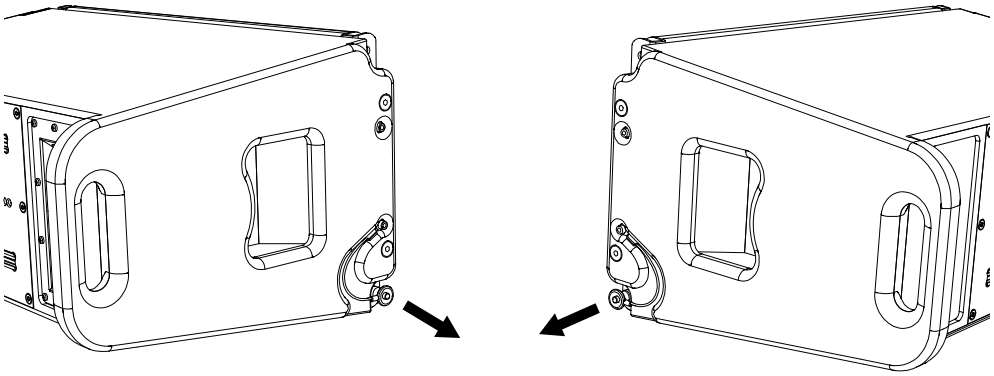

Figure 4.11.1 - Loosening quick-lock pins on the VERA20

NOTE

4. With the aid of a second person, place the VERA20 loudspeaker on the first VERA20 loudspeaker.
5. Pull back the VERA20 loudspeaker until its front splay links align with the rigging rails of the lower loudspeaker.

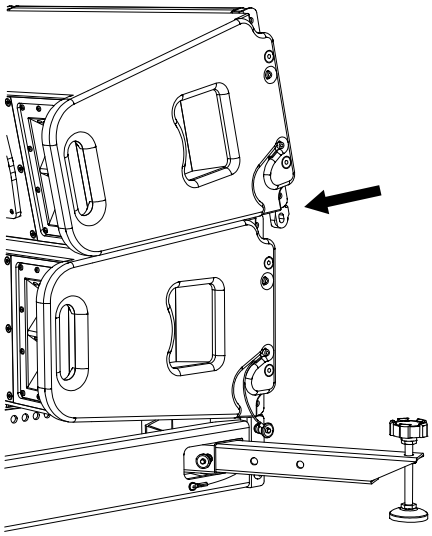

Figure 4.11.2 – Pushing back the VERA20 speaker

WARNING

6. Insert the VERA20 loudspeaker's two front quick-locking pins into the holes of the lower loudspeaker.

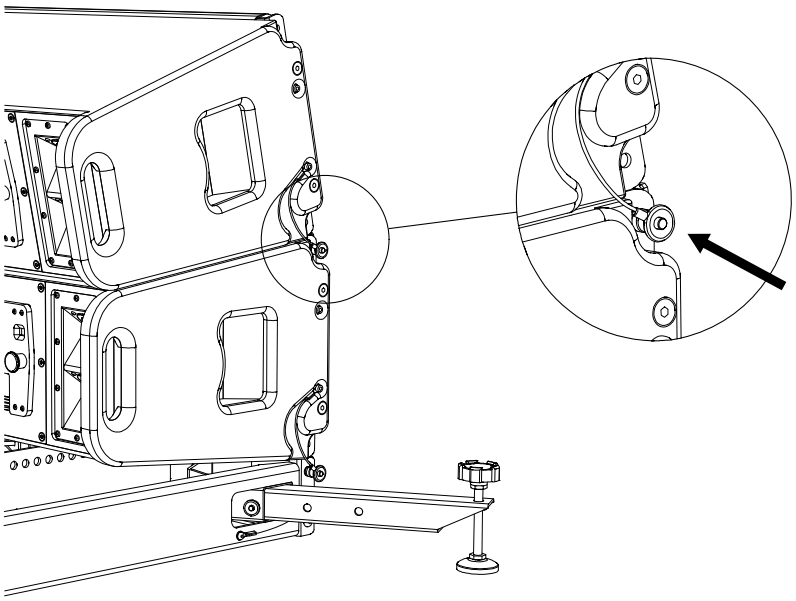

Figure 4.11.3 – Inserting the quick-locking pins

WARNING

7. Use the left slider on the lower VERA20 loudspeaker's rear rigging to select the angle for the next upper speaker.

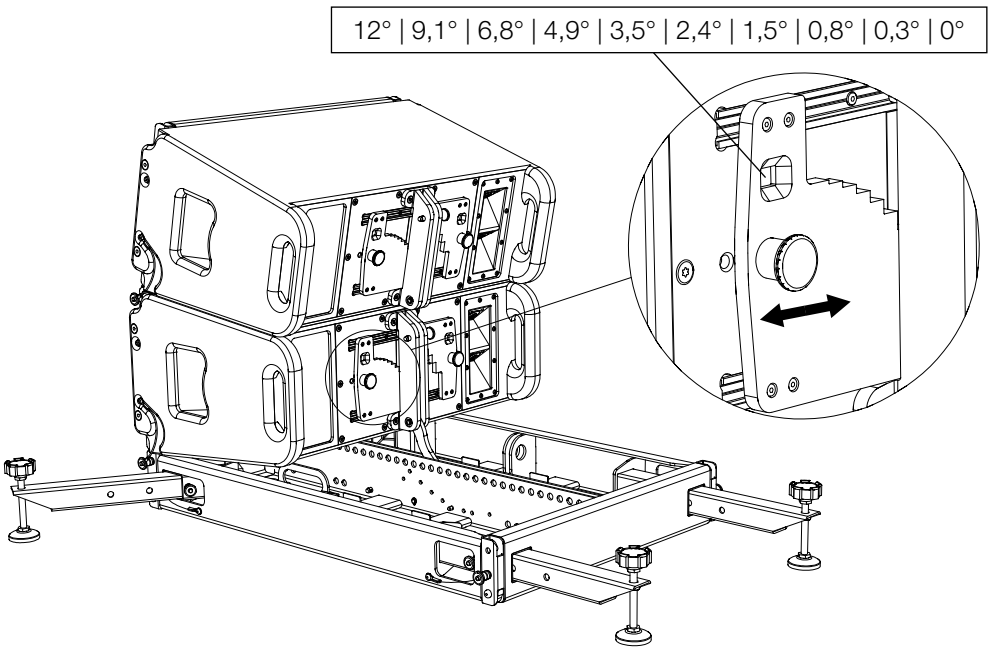

Figure 4.11.4 – moving the left slider

WARNING

8. Loosen the quick-locking pin on the main carrier of the upper VERA20 loudspeaker's back rigging and fold out the hook by 90°.

9. Lift the upper VERA20 loudspeaker unit at the back and pull the hook all the way down so that it aligns with the rear rigging of the lower VERA20 loudspeaker unit.

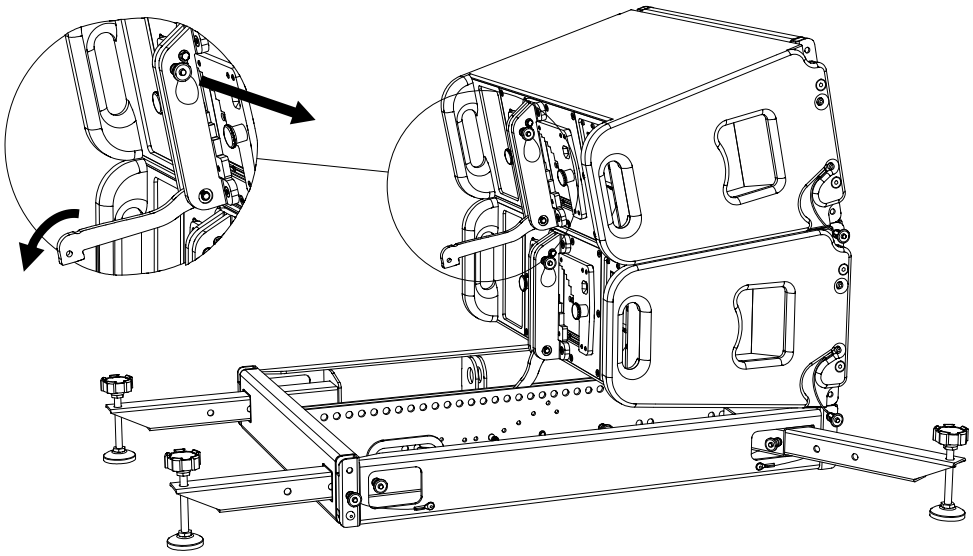

Figure 4.11.5 – Folding out the hook

WARNING

10. Insert the quick-locking pin into the main carrier of the lower VER20 loudspeaker's rear rigging to secure it.

11. Lower the VERA20 speaker until the hook comes to rest on the lower left slider.

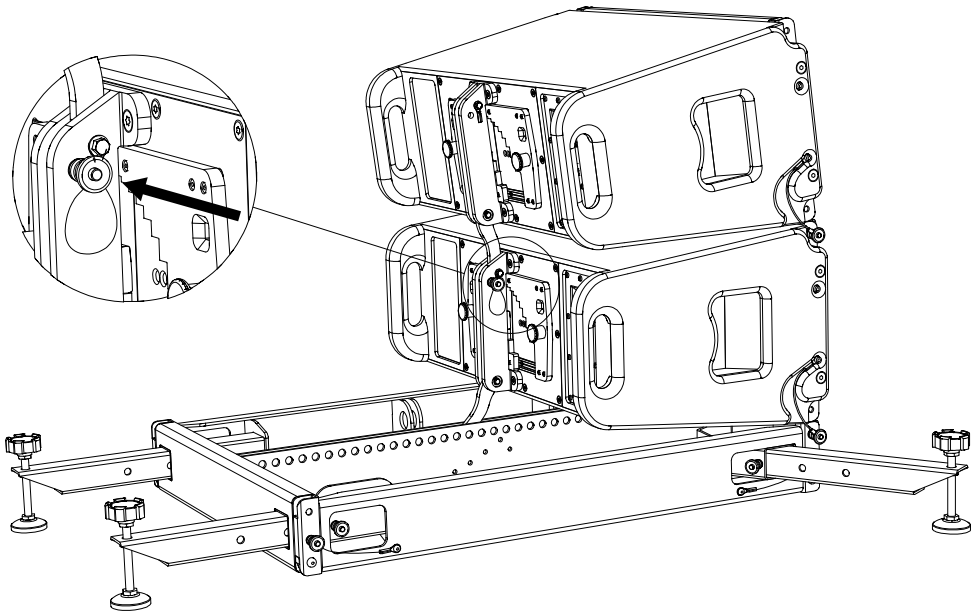

Figure 4.11.6 – Inserting the quick-locking pins

WARNING

12. Move the right slider of the lower speaker to the left until it displays the same number of degrees as the left slider.

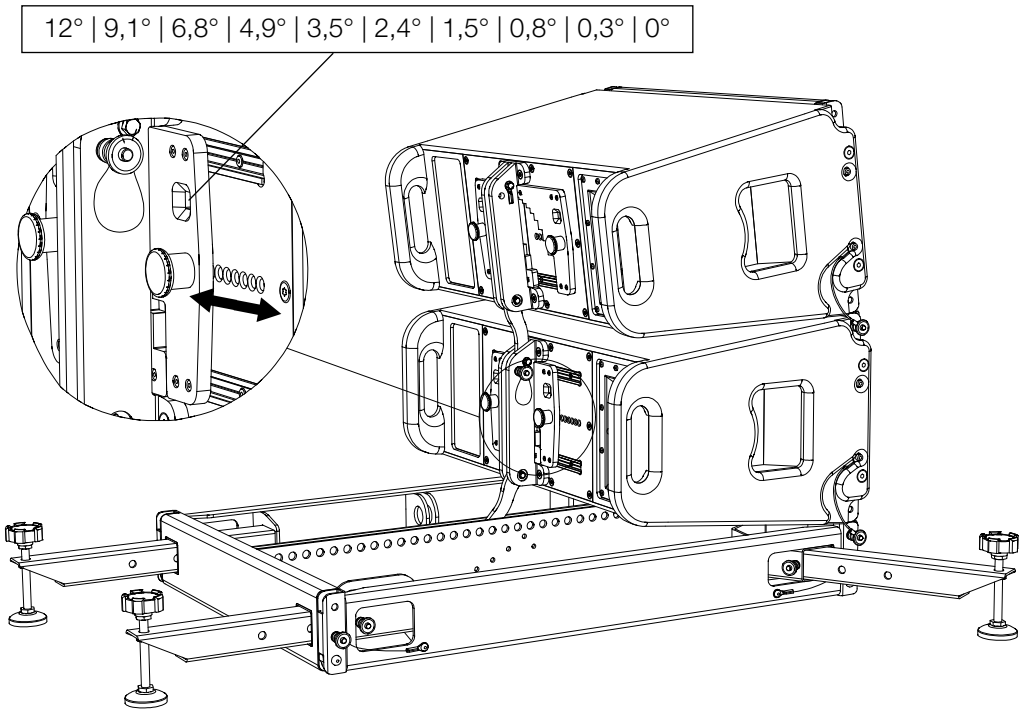

Figure 4.11.7 – moving the right slider

WARNING

13. This secures the upper loudspeaker.Follow the instructions in this section of the manual to connect additional VERA20 speakers.

4.12 VERA S32 groundstack Setup

WARNING

1. Please note that setting up the VERA RF600 rigging frame always requires two persons!

NOTE

2. Press down the locking levers on all castors with your foot. This will secure the dolly from rolling away.

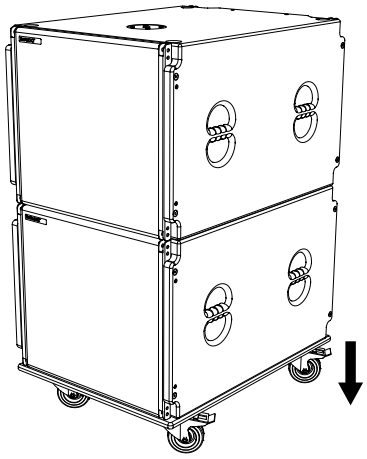

Figure 4.12.1 – VERA S32 loudspeaker on dolly

NOTE

3. With the aid of a second person, place the upper VERA S32 loudspeaker on the back grill.

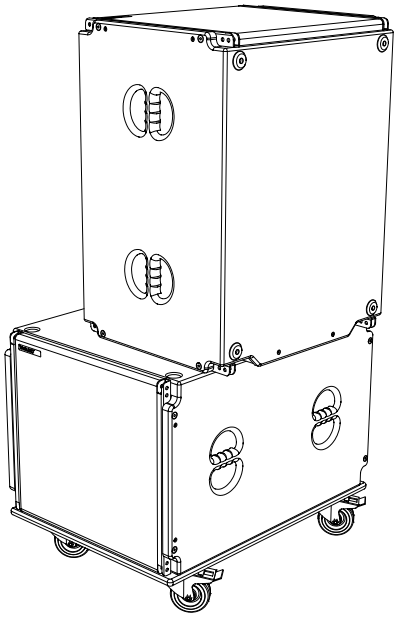

Figure 4.12.2 – VERA S32 loudspeaker on dolly

NOTE

4. Loosen all quick-locking pins on all four box link connectors of the BLS box link set.

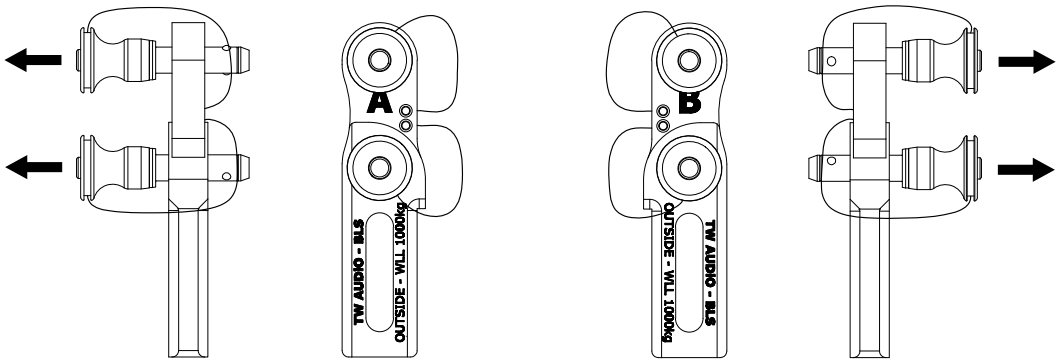

Figure 4.12.3 – BLS Box link set

NOTE

5. Insert all four box link connectors into the flying tracks of the VERA S32 loudspeaker.

6. Pay attention to the alignment of each box link connector. The “OUTSIDE” labels on all box link connectors must be visible from outside.

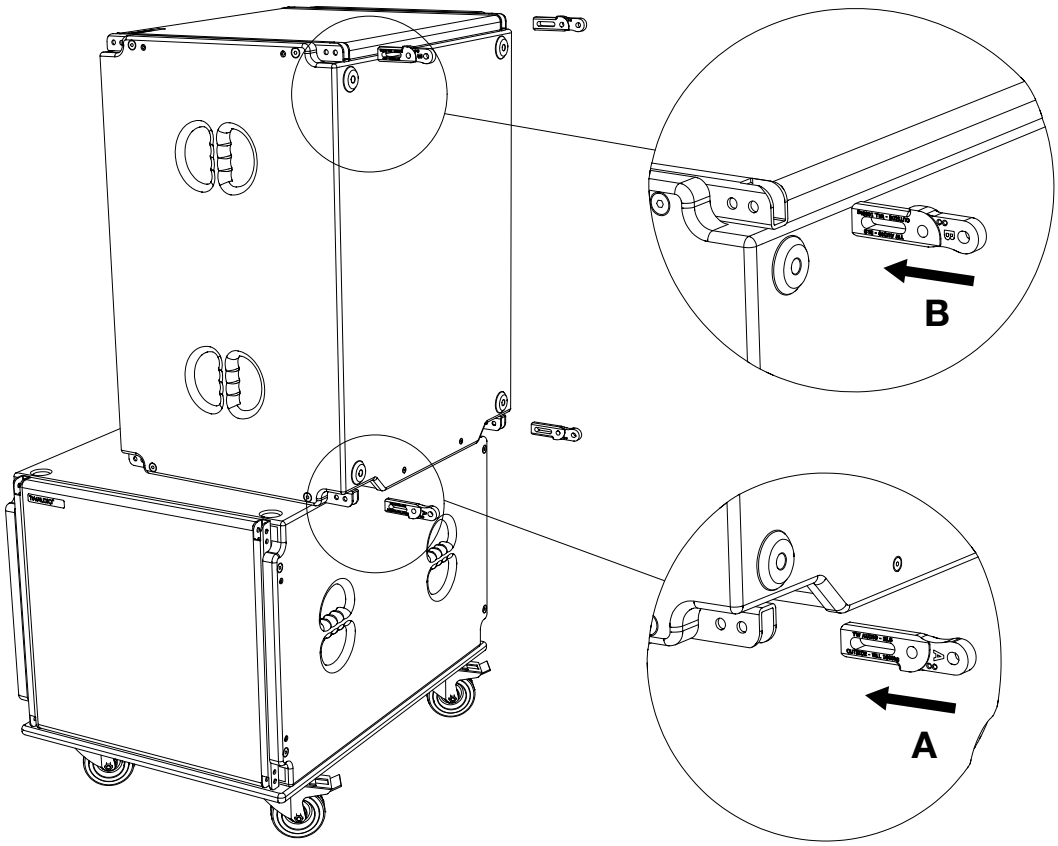

Figure 4.12.4 – Inserting the box link connectors into the VERA S32 loudspeaker

WARNING

7. Insert the lower quick-locking pin of each box link connector into the outer hole of the VERA S32 loudspeaker's flying track.

8. Make sure that all quick-locking pins are always completely inserted!

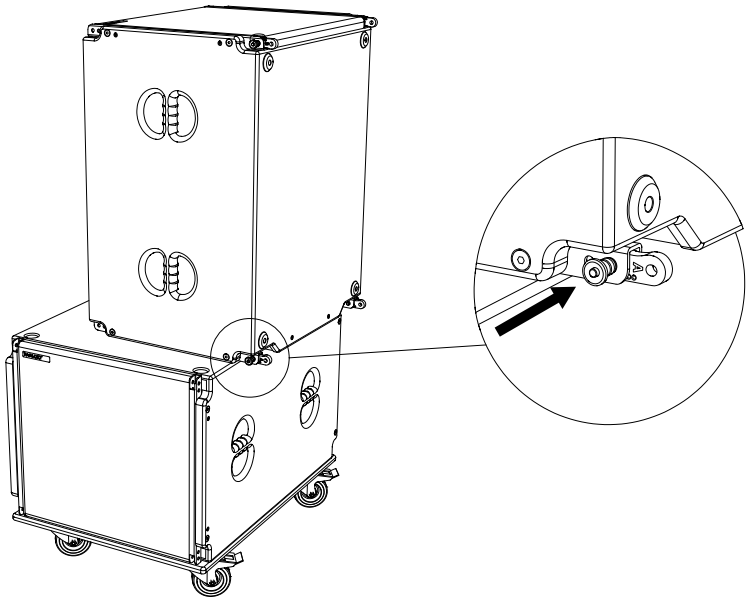

Figure 4.12.5 – Inserting the quick-locking pins

WARNING

9. With the aid of a second person, lift the prepared VERA S32 loudspeaker onto the prepared VERA RF600 rigging frame (see sections 4.2 to 4.6).

10. The box link connectors have to be inserted into the flying tracks of the rigging frame!

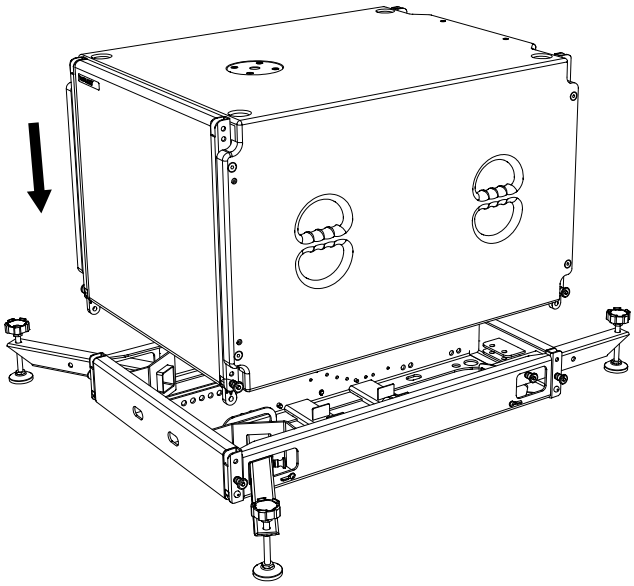

Figure 4.12.6 – Positioning the VERA S32 loudspeaker on the VERA RF600 rigging frame

WARNING

11. Insert the second quick-locking pin of each box link connector into the upper hole of the VERA RF600 rigging frame's flying track.

12. Make sure that all quick-locking pins are always completely inserted!

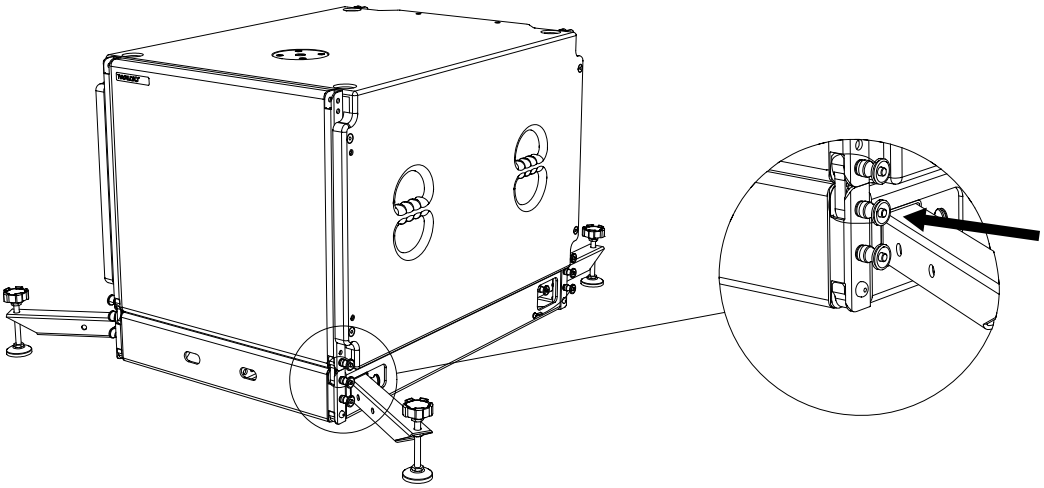

Figure 4.12.7 – Inserting the quick-locking pins

4.13 VERA S32 ground stack setup, from the 2nd speaker

To set up the ground stack array, starting from the second VERA S32 loudspeaker, proceed as follows:

WARNING

1. Please note that setting up the VERA RF600 rigging frame always requires two persons!

NOTE

2. Insert all four box link connectors from the box link set into the flying tracks of the VERA S32 loudspeaker.
3. Pay attention to the alignment of each box link connector. The “OUTSIDE” labels on all box link connectors must be visible from outside.

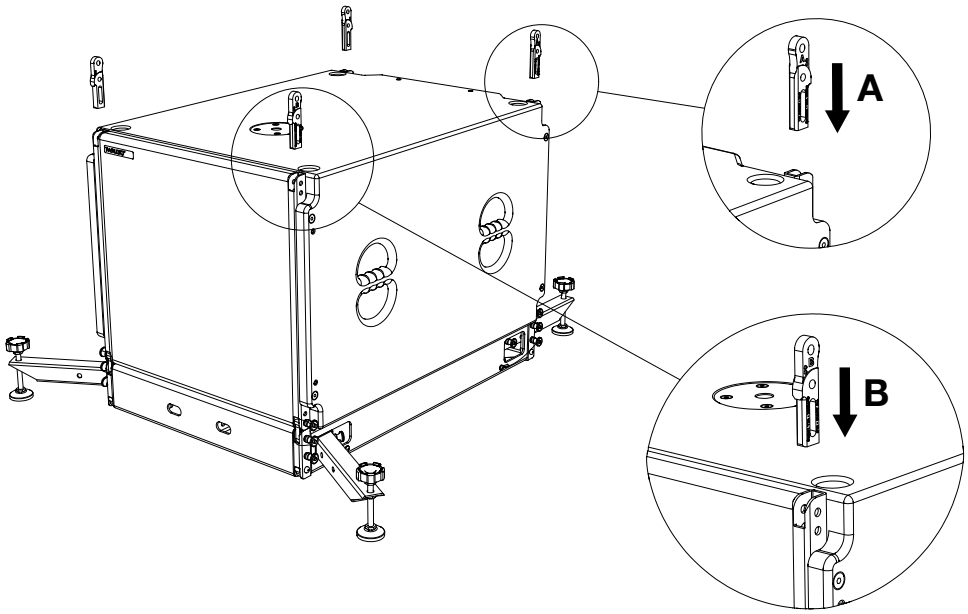

Figure 4.13.1 – Inserting the box link connectors into the VERA S32 loudspeaker (top)

WARNING

4. Insert the lower quick-locking pin of each box link connector into the upper holes of the VERA S32 loudspeaker's flying track.

5. Make sure that all quick-locking pins are always completely inserted!

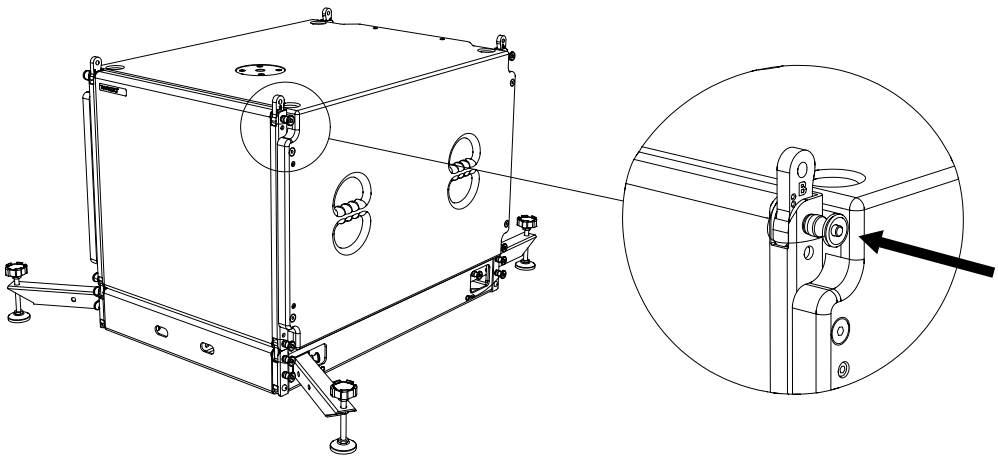

Figure 4.13.2 – Inserting the quick-locking pins

WARNING

6. With the aid of a second person, place the second VERA S32 loudspeaker on the first loudspeaker.

7. The box link connectors have to be inserted into the flying tracks of the lower loudspeaker!

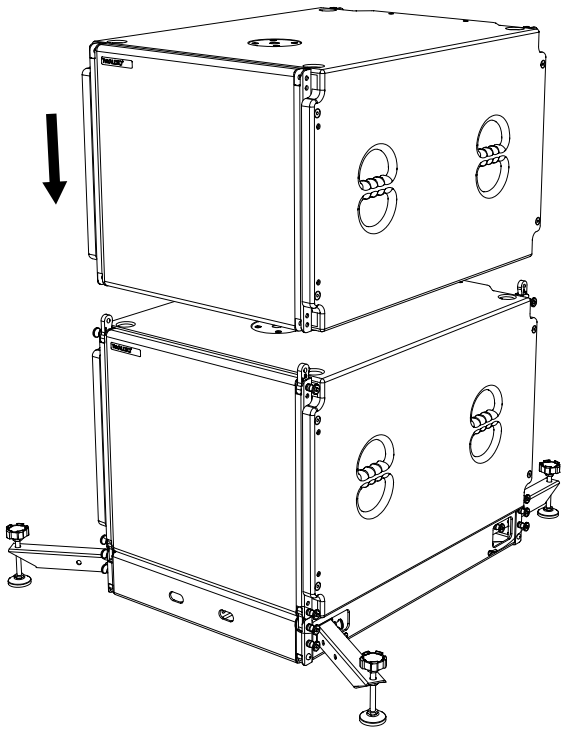

Figure 4.13.3 – Second VERA S32 speaker on top of first speaker

WARNING

8. Insert the second quick-locking pin of each box link connector into the lower holes of the upper VERA S32 loudspeaker's flying track.

9. Make sure that all quick-locking pins are always completely inserted!

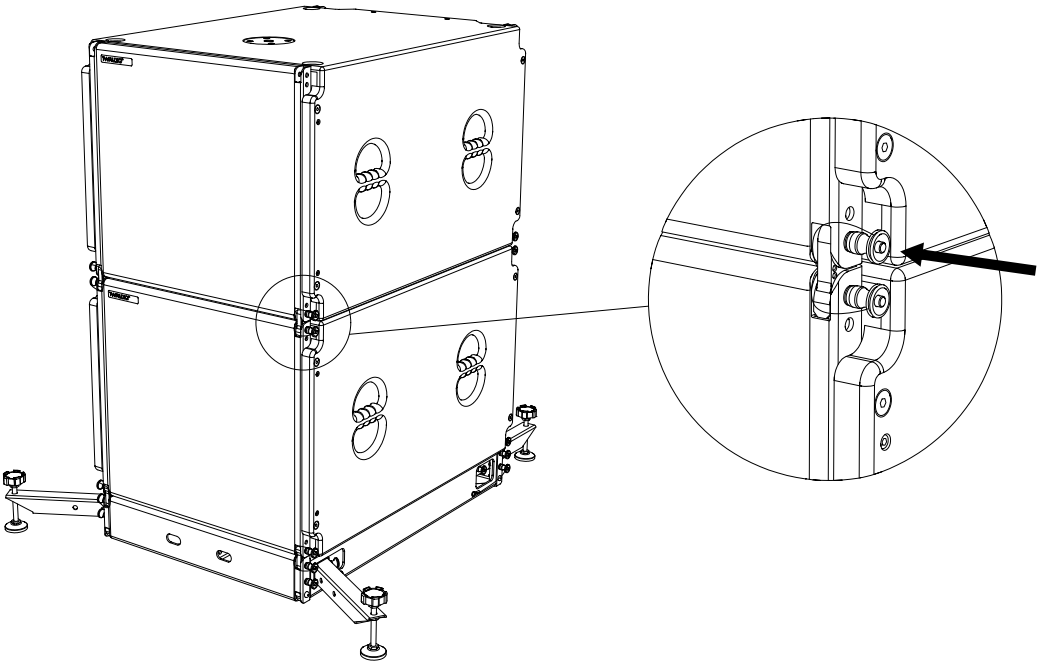

Figure 4.13.4 – Inserting the quick-locking pins

WARNING

10. Follow the instructions in this section of the manual to connect additional VERA S32 speakers.

4.14 Mixed VERA S32 and VERA20 Groundstack Setup

To set up a mixed ground stack array with VERA S32 and VERA20 loudspeakers, proceed as follows:

WARNING

1. Please note that setting up the VERA RF600 rigging frame always requires two persons!

NOTE

2. With the aid of a second person, place the second VERA RF600 rigging frame on the upper VERA S32 loudspeaker.

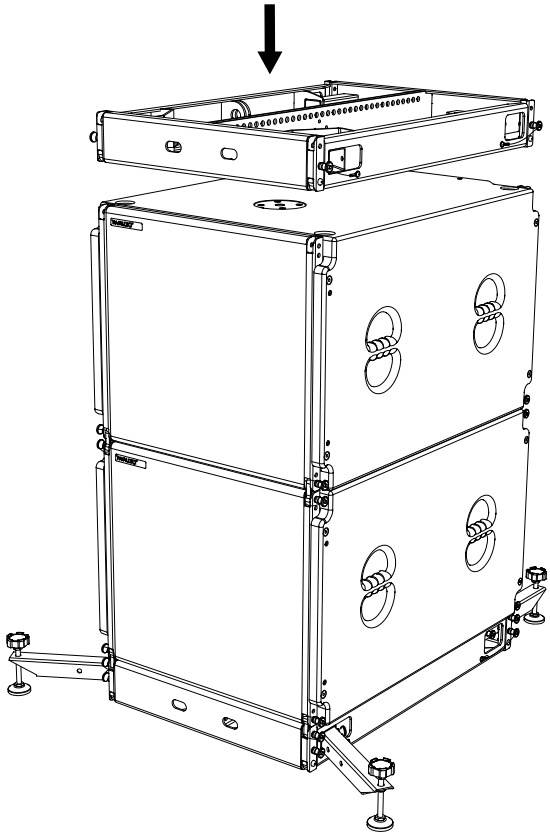

Figure 4.14.1 – Second VERA RF600 rigging frame on top of VERA S32 loudspeaker

NOTE

3. Loosen all four quick-locking pins on the VERA RF600 rigging frame.
4. All four splay links in the front rigging rails must be extended downwards.

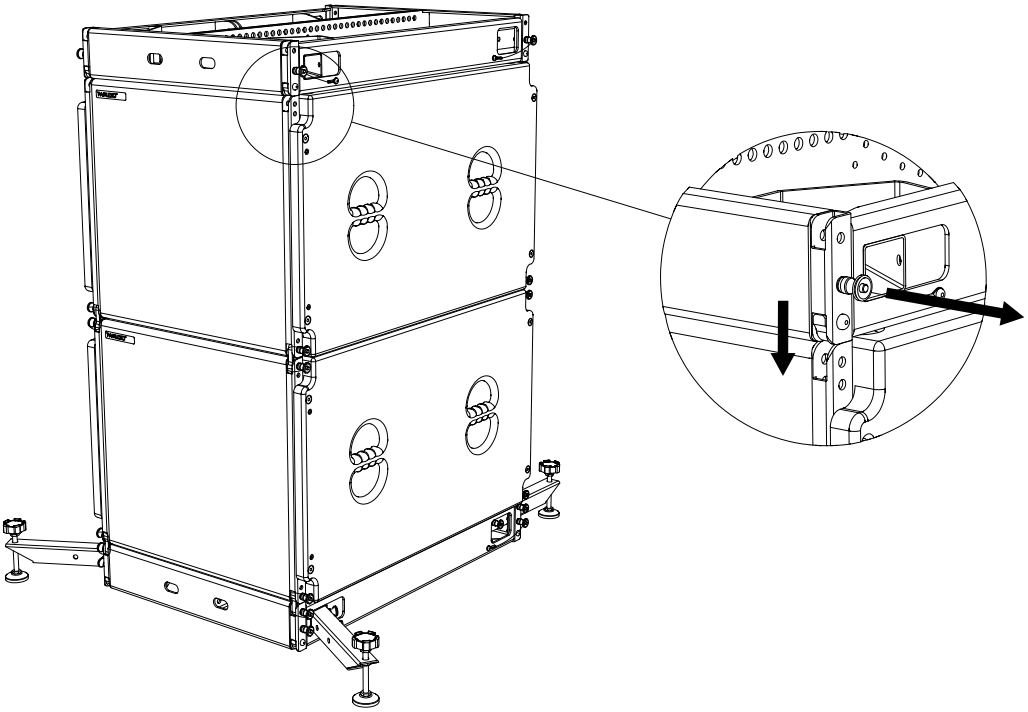

Figure 4.14.2 – Releasing the quick-locking pins

WARNING

5. Insert all four quick-locking pins into the upper holes of the upper VERA S32 loudspeaker's flying track.

6. Make sure that all quick-locking pins are always completely inserted!

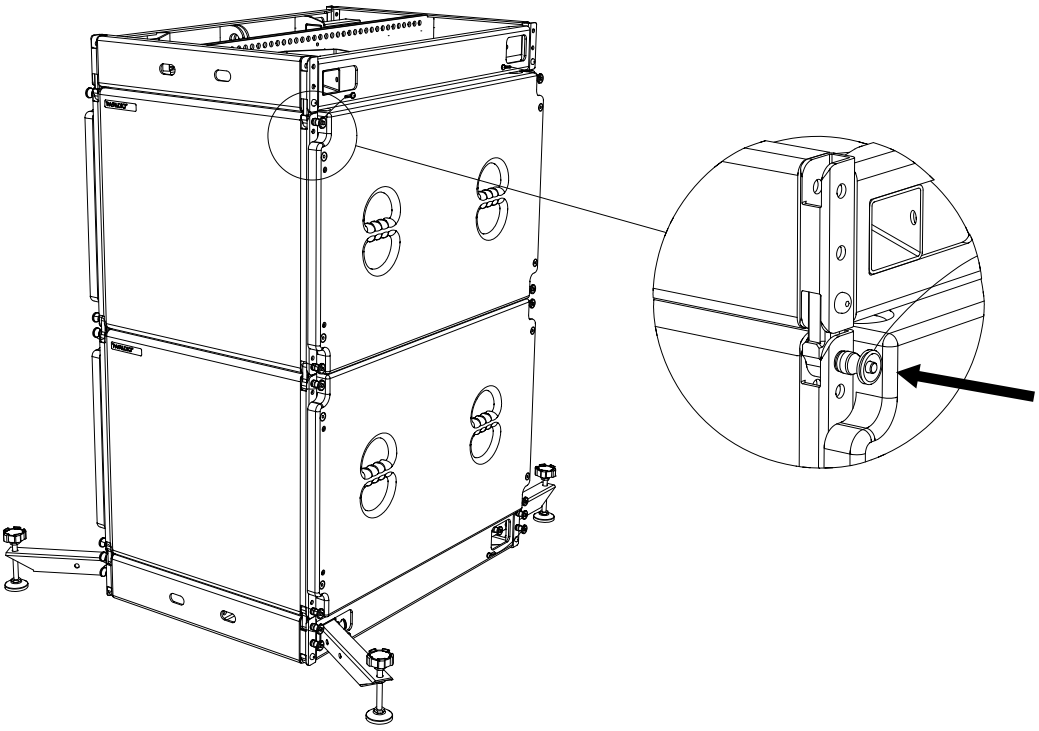

Figure 4.14.3 – Inserting the quick-locking pins

WARNING

7. When placing VERA20 loudspeakers on the upper VERA RF600 rigging frame, proceed as described in section 4.11.

WARNING

8. When using the VERA RF600 rigging frame as a ground stack, stability must always be ensured, especially if the ground stack is tilted!

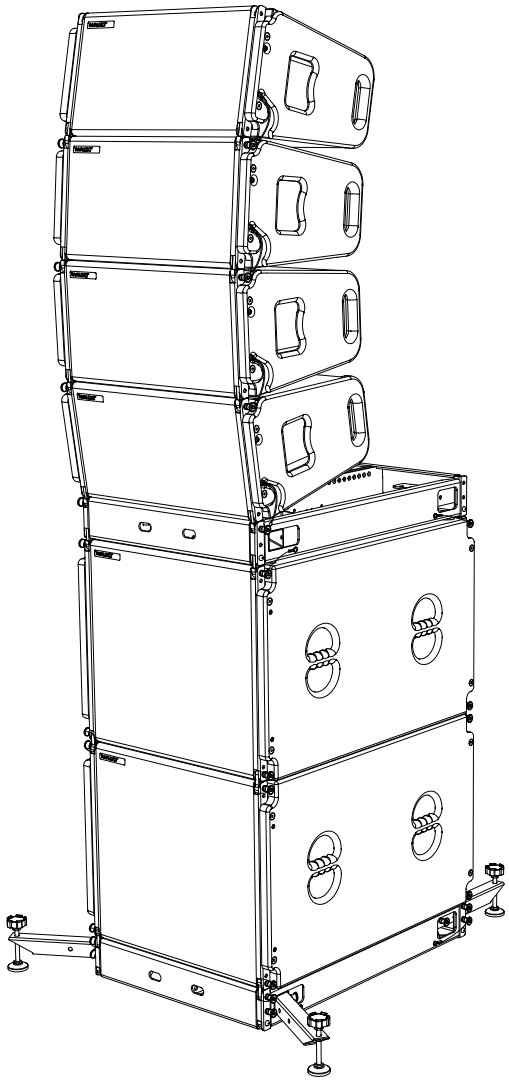

Figure 4.14.4 - Groundstack system proposals

4.15 Preparing of VERA20 for rigging

NOTE

1. Use the EASE Focus simulation software to determine the number of VERA20 loudspeakers suitable for your application.

NOTE

2. Each VERA DLV20 transport dolly will hold four VERA20 loudspeakers. Provide the number of loaded transport dollies required for your application.
3. Do not remove the transport dolly covers before you have reached the operation site.

NOTE

4. Remove both quick-locking pins on the left and right side of the upper VERA20 loudspeaker.
5. Lift off the top of the transport dolly.

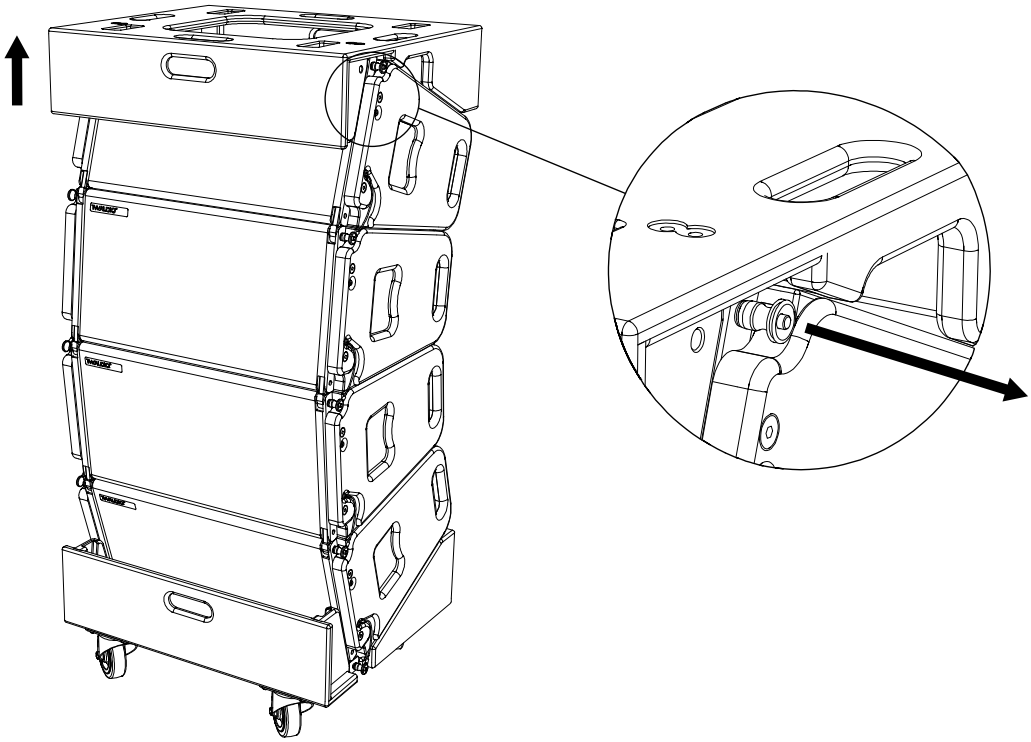

Figure 4.15.1 - VERA20 speakers on VERA DLV20 transport dolly

WARNING

6. Make sure that all splay links are fully extended and that all quick-locking pins are always completely inserted!Make sure that all splay links are fully extended and that all quick-lock ing pins are always completely inserted!

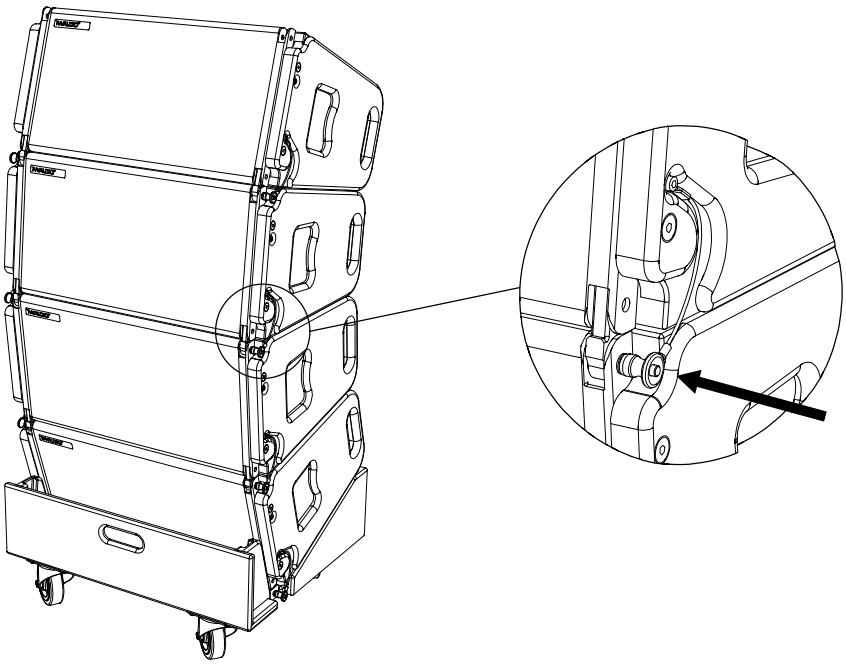

Figure 4.15.2 – Checking quick-locking pins

NOTE

7. Use the EASE Focus simulation software to determine the angle values suitable for your application.

WARNING

8. Move the right hand sliders on all speakers to the previously determined angle value.
9. Make sure that all quick-locking pins are always completely inserted!

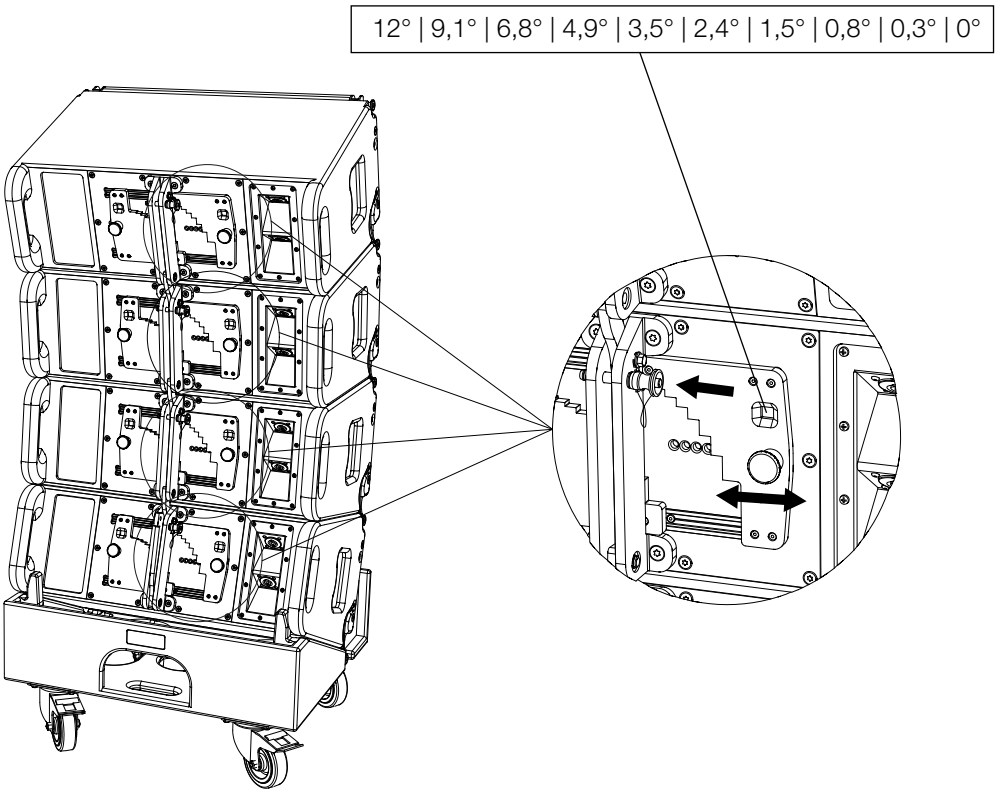

Figure 4.15.3 – moving the right slider

4.16 Using the VERA LA900 load adapter in flown systems

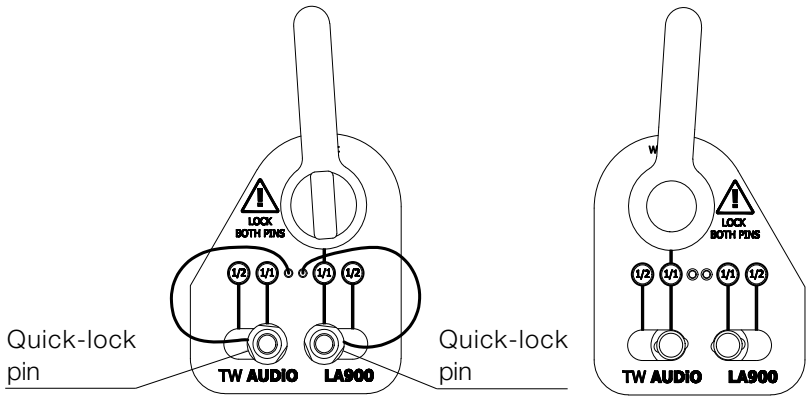

Figure 4.16.1 – VERA LA900 load adapter

WARNING

Two quick-locking pins are attached to the VERA LA900 load adapter.

Attach the VERA LA900 load adapter using both quick-locking pins to the VERA RF600 rigging frame!

NOTE

Use the EASE Focus simulation software to determine the correct pin points for your application.

The VERA LA900 load adapter's design allows for four different usage scenarios.

The two integrated slots allow both integer and half-integer settings.
The marker on the shackle on the VERA LA900 load adapter indicates the currently selected value. This can clearly be seen in Figures 4.3.2 to 4.3.5.

The following illustrations show the different applications in an example:

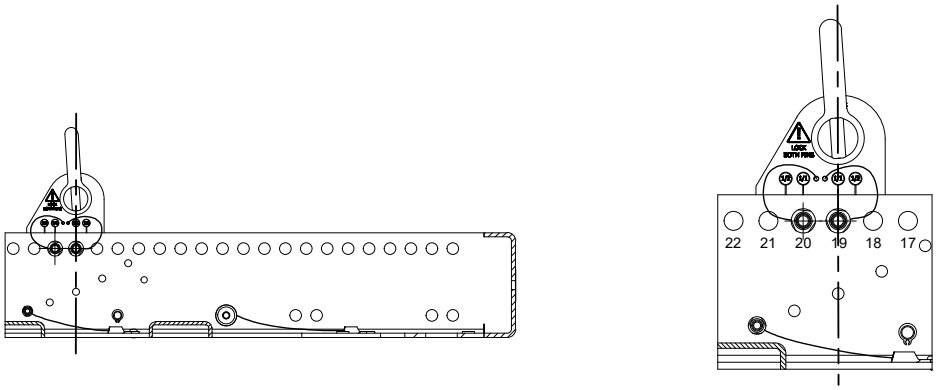

Figure 4.16.2 - VERA LA900 load adapter at pin point 19 – forward orientation

For the forward-facing VERA LA900 load adapter, inserting the quick-locking pins into 19 and 20 will result in 19 as the pin point.

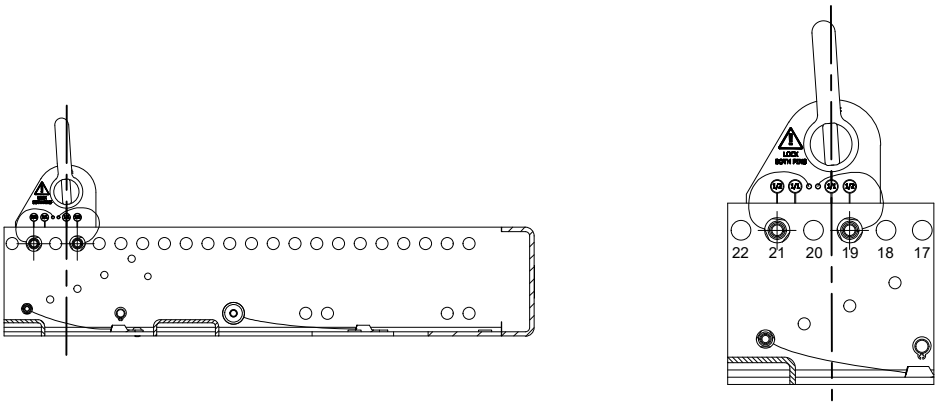

Figure 4.16.3 - VERA LA900 load adapter at pin point 19.5 – forward orientation

Moving the quick-locking pin of the VERA LA900 load adapter from 20 to 21 results in 19.5 as the new pin point.

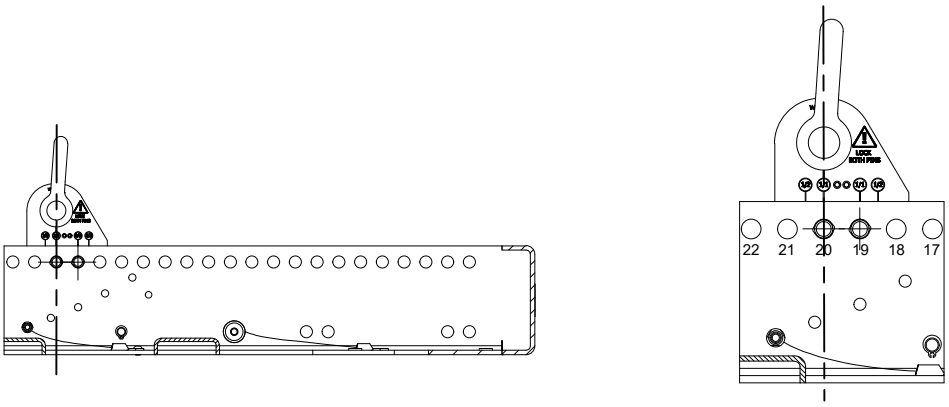

Figure 4.16.4 - VERA LA900 load adapter at pin point 20 – reverse orientation

For the backward-facing VERA LA900 load adapter, inserting quick-locking pins into 19 and 20 will result in 20 as the pin point.

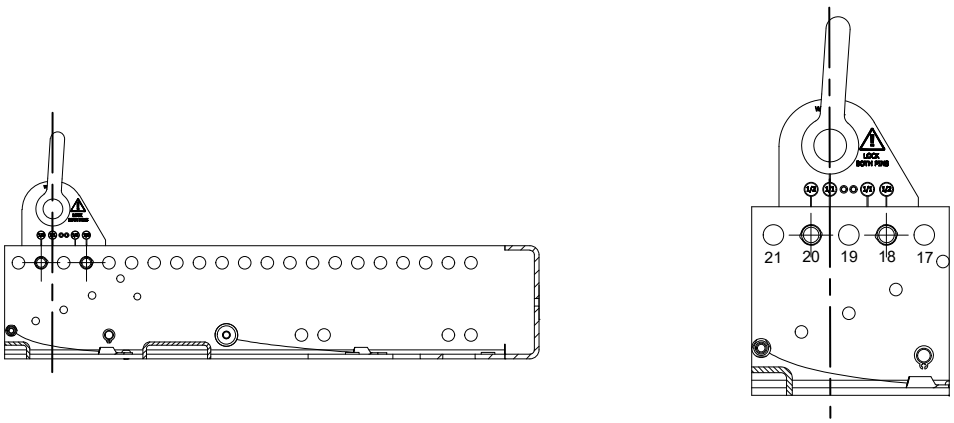

Figure 4.16.5 - VERA LA900 load adapter at pin point 19.5 – reverse orientation

Moving the quick-locking pin of the VERA LA900 load adapter from 19 to 18 results in 19.5 as the new pin point.

4.16 Secondary safety component in the flown system

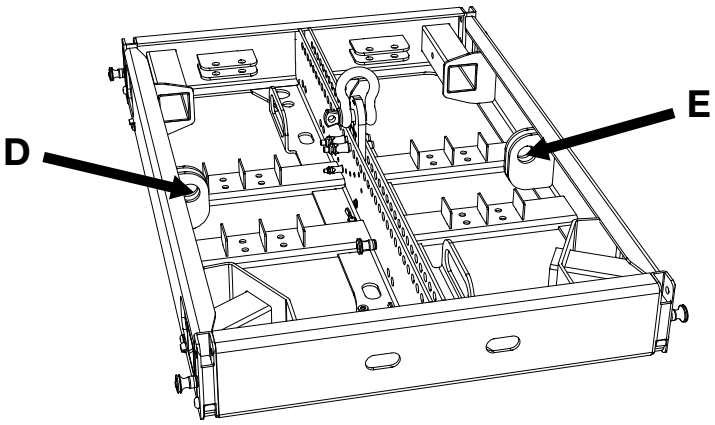

Figure 4.17.1 – secondary safety component

NOTE

For the secondary safety component, the respective national electrotechnical regulations apply.

WARNING

Attach this second, separate safety component to the “for safety wire” points D and E. This could for example be safety chains.

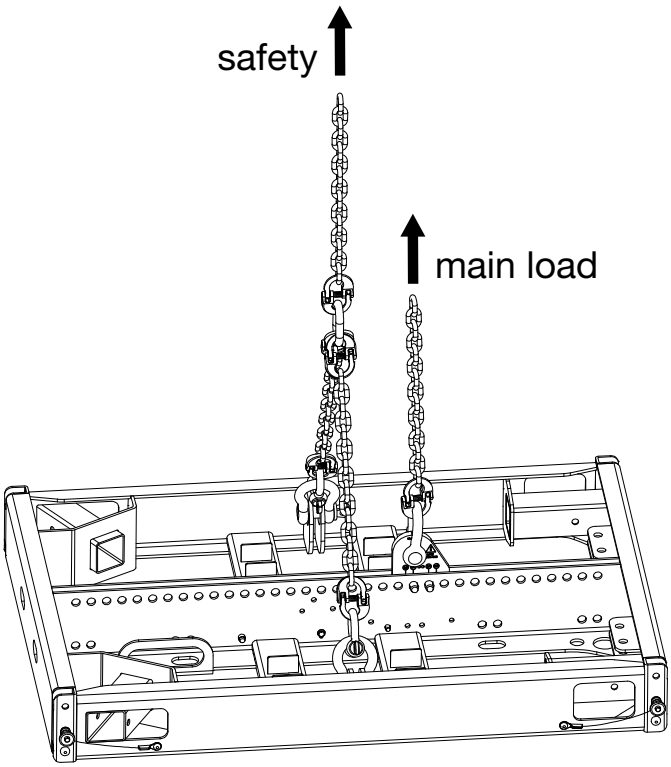

Figure 4.17.2 – Secondary safety component example

4.18 Wind load in the flown system

WARNING

Before setting up the system outdoors, consider unexpected wind conditions at the operation site!

Disassemble your system immediately when wind speeds exceed 8 bft (34 to 40 kn / 62 to 74 kph / 38.5 to 46 mph) and secure the system components!

Make sure that there are no persons in the immediate vicinity of the system structure!

WARNING

Make sure that the system structures are not operated over the audience at wind speeds in excess of 6 bft (22 to 27 kn / 39 to 49 kph / 24.2 to 30.45 mph) and that there are no persons in the immediate vicinity of the system structure!

4.19 Flown system setup with VERA20 loudspeakers

To set up the VERA20 loudspeaker system, proceed as follows:

WARNING

1. Please note that setting up the VERA RF600 rigging frame always requires two persons!

NOTE

2. Use the EASE Focus simulation software to determine the number of VERA20 loudspeakers suitable for your application.

WARNING

3. Remove the covers from the CaseRF600 transport case.
4. Insert the hook of your chain hoist into the shackle of the VERA LA900 load adapter, which is mounted on the VERA RF600 rigging frame. The pin points suitable for your application have been previously selected.
5. Actuate the chain hoist and raise the VERA RF600 rigging frame carefully from the CaseRF600 transport case.

NOTE

6. Loosen the two quick-locking pins at the front of the VERA RF600 rigging frame.
7. Both splay links in the front rigging rails must be extended downwards.

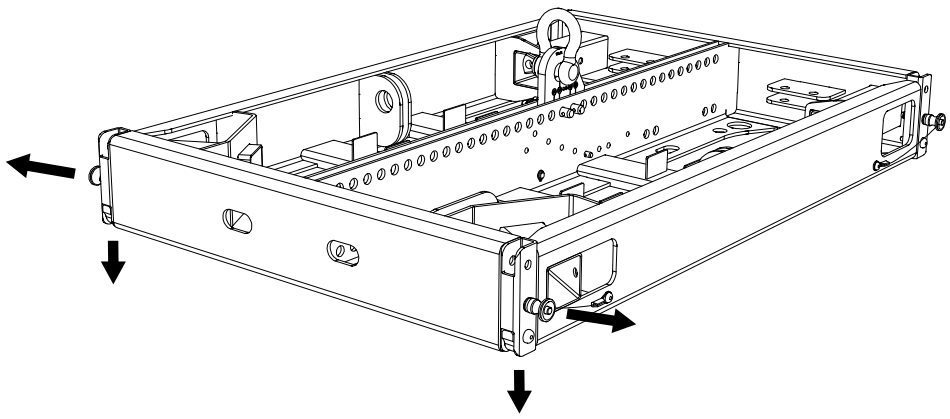

Figure 4.19.1 – VERA RF600 rigging frame

NOTE

8. Use a chain hoist to place the VERA RF600 rigging frame on top of the top VERA20 loudspeaker.

9. Pull back the VERA RF600 rigging frame until its front splay links align with the rigging rails of the top loudspeaker.

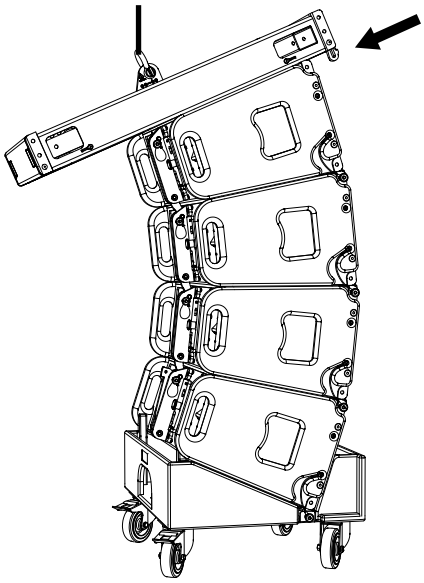

Figure 4.19.2 – Sliding the rigging frame's splay links into the loudspeaker splay links

WARNING

10. Connect the two front splay links of the VERA RF600 rigging frame to the top loudspeaker using the quick-locking pins.

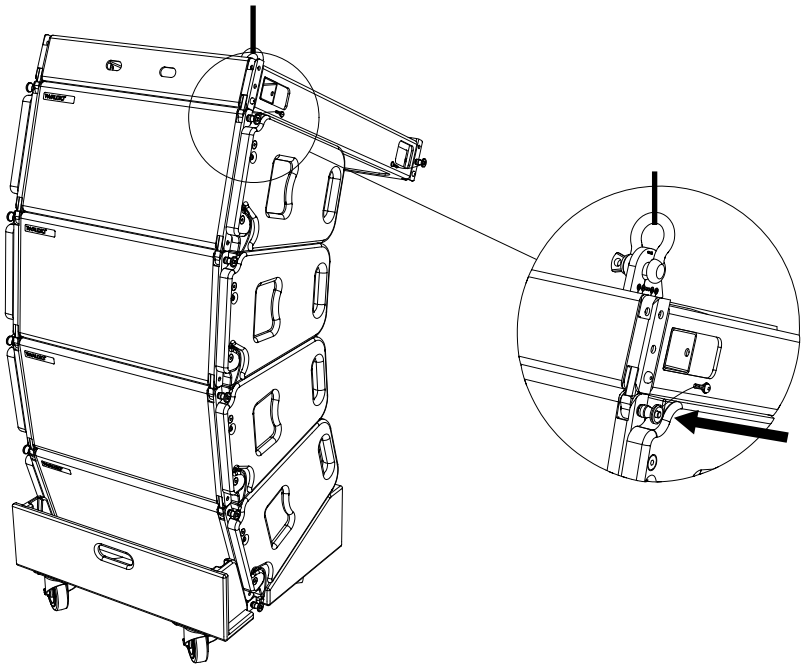

Figure 4.19.3 – Inserting the quick-locking pins

NOTE

11. Loosen the quick-locking pins for the rear hook of the VERA RF600 rigging frame.

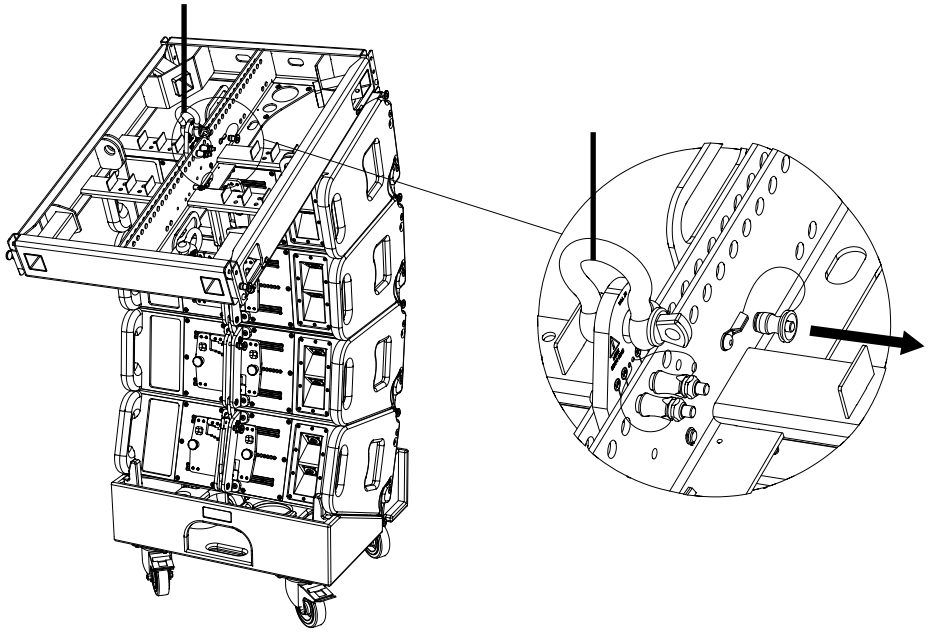

Figure 4.19.4 – Releasing the quick-locking pins

NOTE

12. Loosen the quick-locking pin on the main carrier of the upper VERA20 loudspeaker's back rigging.

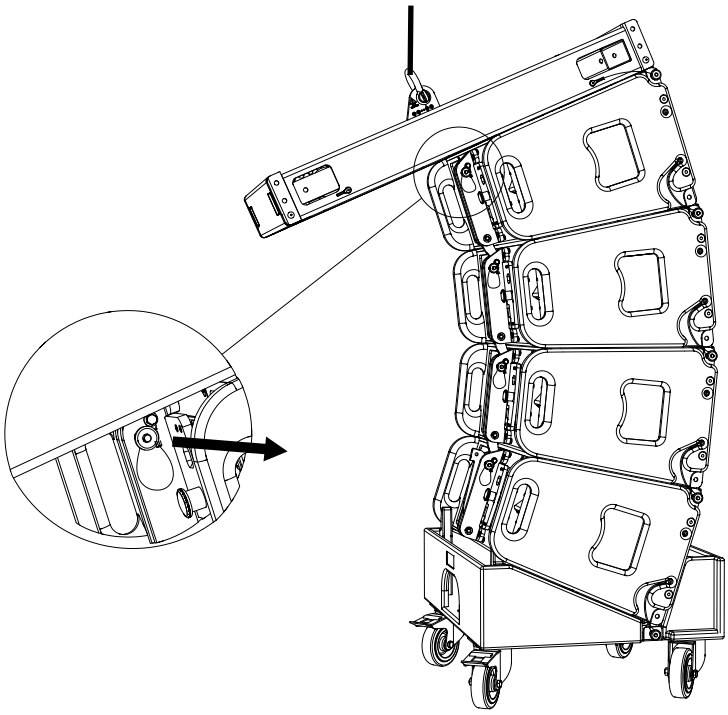

Figure 4.19.5 – Releasing the quick-locking pins

NOTE

13. Lift the VERA RF600 rigging frame horizontally, which should make the hook on the VERA RF600 rigging frame fold out downwards.

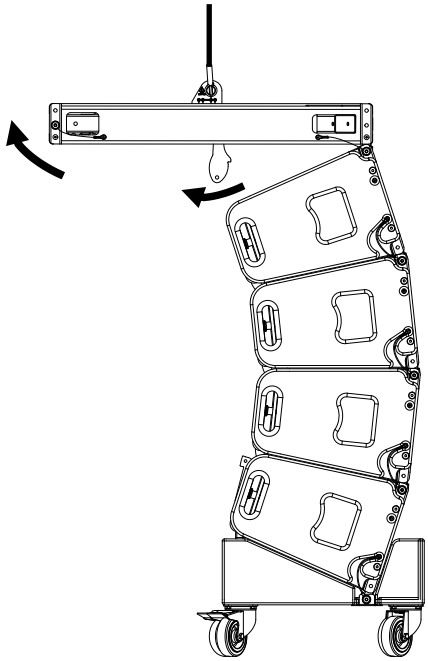

Figure 4.19.6 – Folding out the hook

WARNING

14. Lower the VERA RF600 rigging frame until the hook slides into the main carrier of the rear rigging.

15. Insert the quick-locking pin into the main carrier of the top VERA20 speaker's back rigging so that the rigging frame's hook is connected to the top speaker.

16. Make sure that all quick-locking pins are always completely inserted!

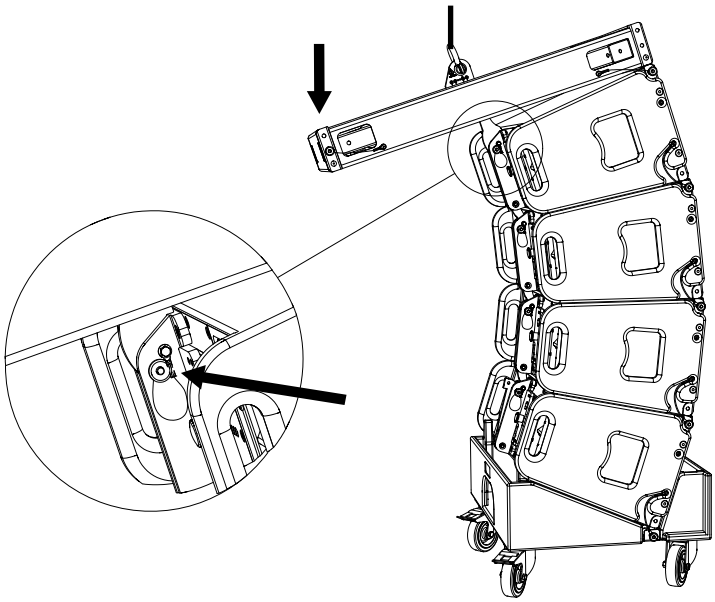

Figure 4.19.7 – Inserting hook and quick-locking pins

WARNING

17. Reinsert the quick-locking pins of the hook on the VERA RF600 rigging frame into its position.

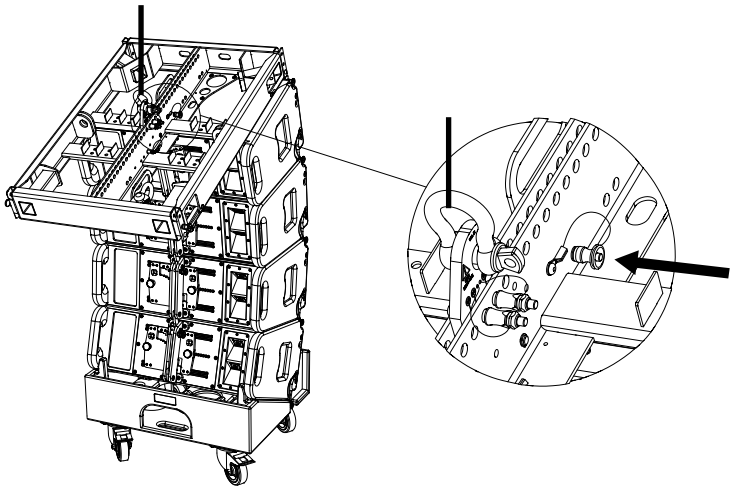

Figure 4.19.8 – Inserting the quick-locking pins

WARNING

18. Actuate the chain hoist and raise the VERA RF600 rigging frame with the VERA20 loudspeakers approximately one meter. Doing so will move each hook on the main support of the return rigging into its holding position.

WARNING

19. Move all left hand sliders on all speakers to the right until they display the same angle value as the right hand sliders. Now all speakers are securely mounted.

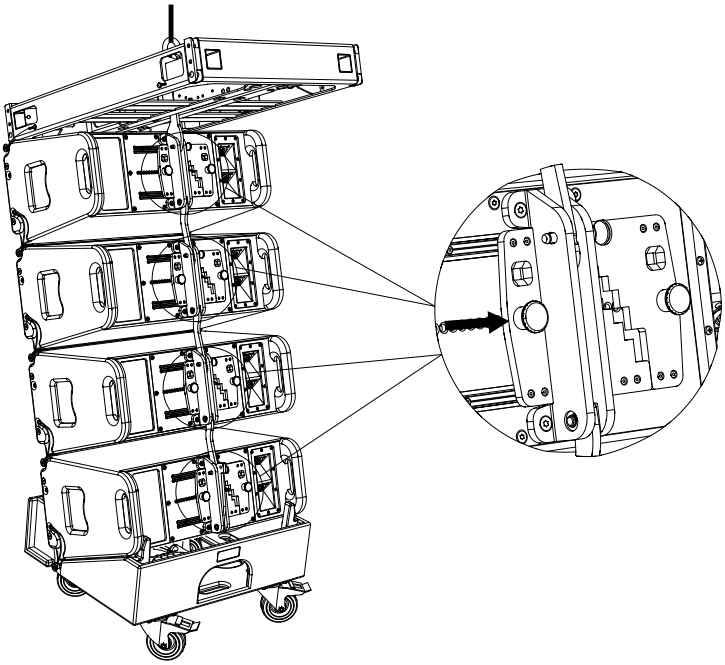

Figure 4.19.9 – moving the left slider

NOTE

20. Actuate the chain hoist and raise the VERA RF600 rigging frame with the VERA20 loudspeakers once more.

21. Hold the lower part of the transport dolly with one hand.

22. Remove both quick-locking pins on the left and right side of the transport dolly and place it on the ground.

23. Store the complete transport dolly in a safe place until reused.

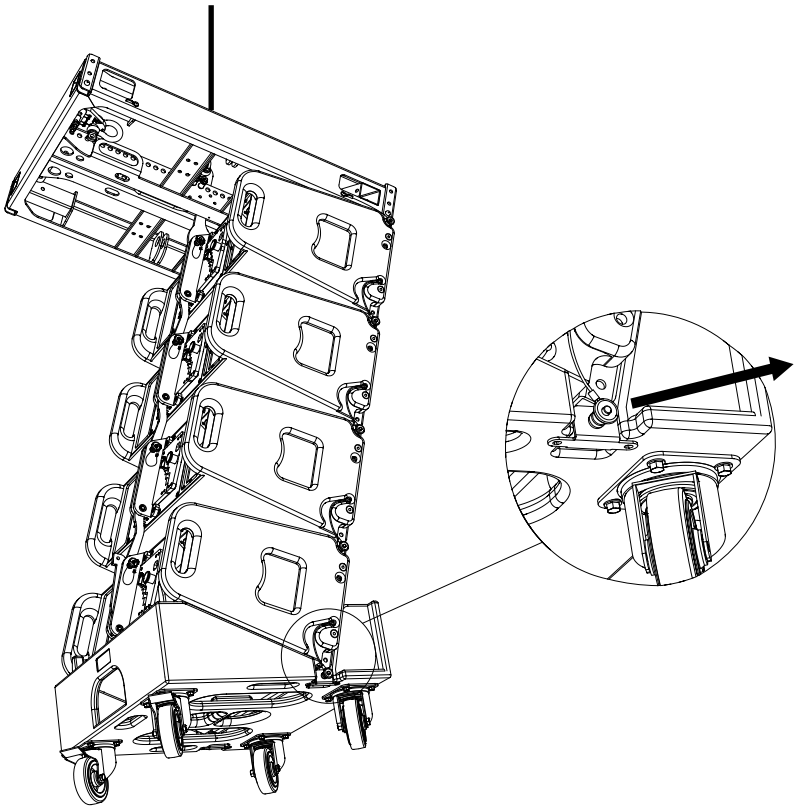

Figure 4.19.10 – Releasing the quick-locking pins

4.20 Flown system setup with VERA20 loudspeakers, from the second speaker set

Continue setup of the VERA20 loudspeaker system for rigging as follows:

WARNING

1. Please note that setting up the VERA RF600 rigging frame always requires two persons!

NOTE

2. Proceed preparation for the second loudspeaker set as described in section 4.15.
3. Use a chain hoist to place the already assembled loudspeakers onto the top loudspeaker of the second loudspeaker set.
4. Slide the second speaker set on the transport dolly forward until the front splay links on the bottom speaker meet the rigging rails on the top speaker of the second speaker set.

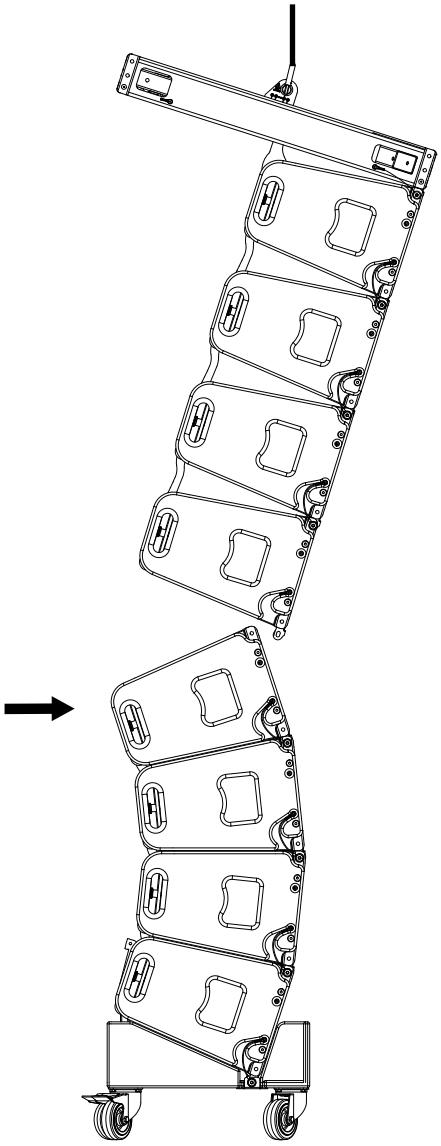

Figure 4.20.1 – Moving the second speaker set

WARNING

5. Next, insert the VERA20 loudspeaker's two front quick-locking pins into the holes of the top loudspeaker in the second speaker set.

6. Make sure that all quick-locking pins are always completely inserted!

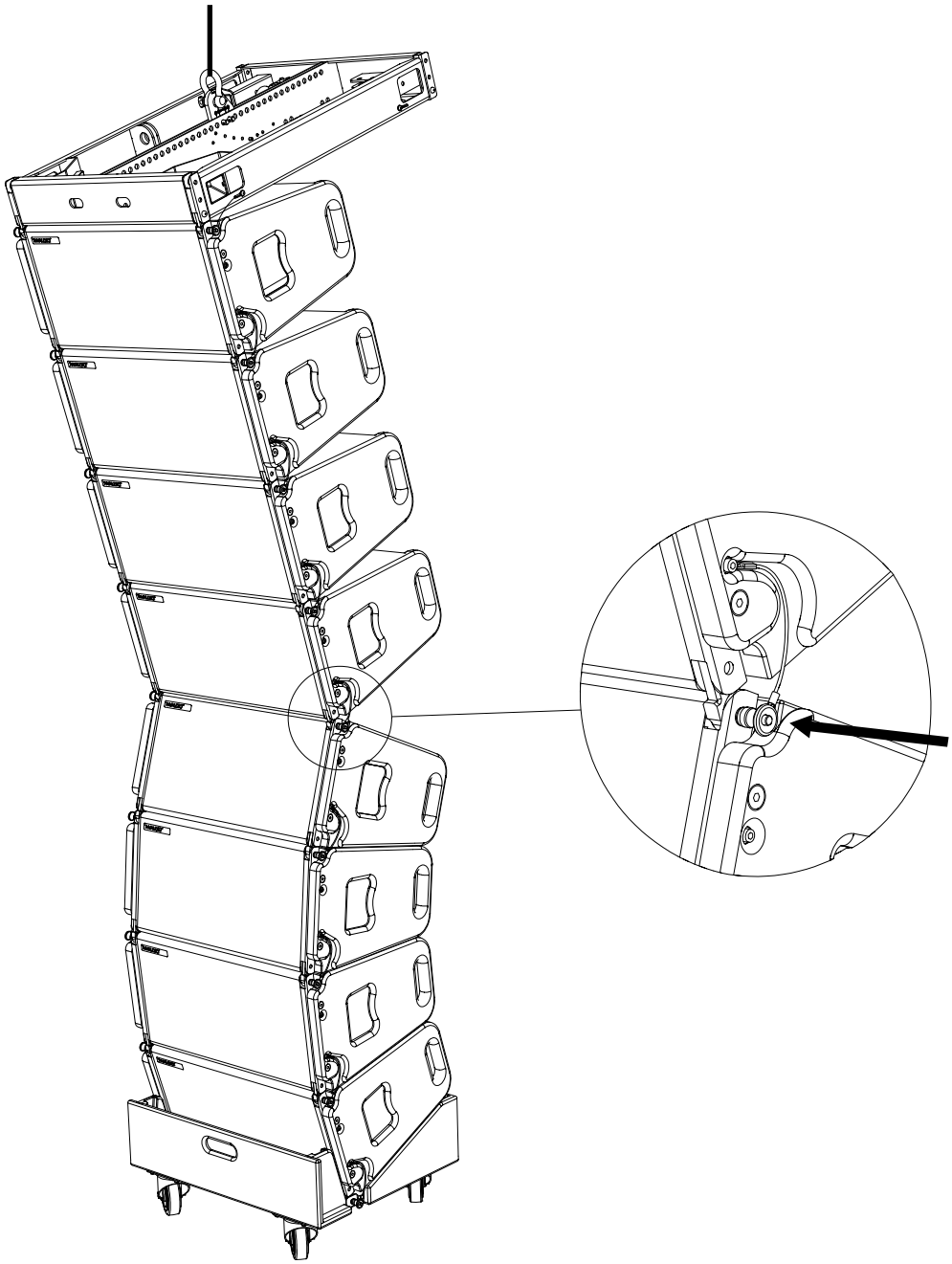

Figure 4.20.2 – Inserting the quick-locking pins

NOTE

7. Lower the hook on the main carrier of the rear rigging of the bottom loudspeaker in the first speaker set all the way down.

8. Loosen the quick-locking pin on the main carrier of the back rigging of the top loudspeaker in the second speaker set.

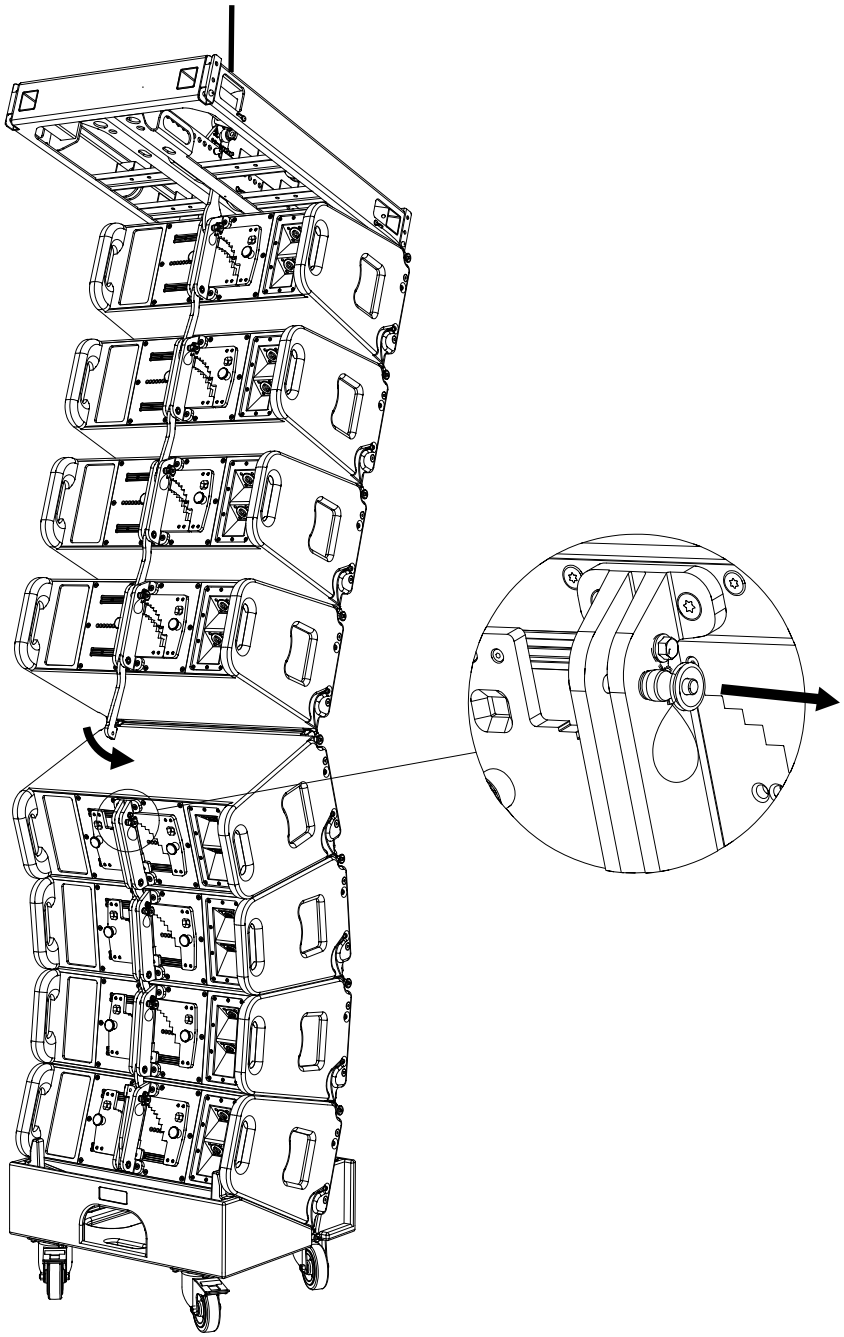

Figure 4.20.3 – Folding out the hook

WARNING

9. Actuate the chain hoist and raise the VERA RF600 rigging frame with the VERA20 loudspeakers so that the loudspeakers lift off the ground and hang freely.

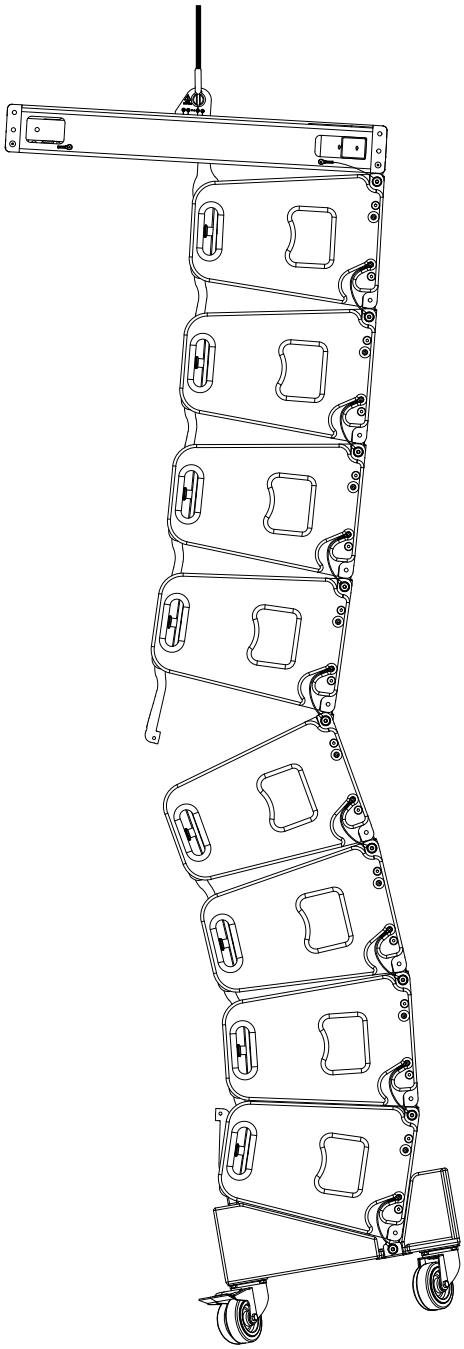

Figure 4.20.4 – Lift the system off the ground

WARNING

10. Move all left hand sliders on all speakers to the right until they display the same angle value as the right hand sliders. Only the top speaker in the second speaker set is exempt from this step. Now all speakers in the lower set are securely mounted.

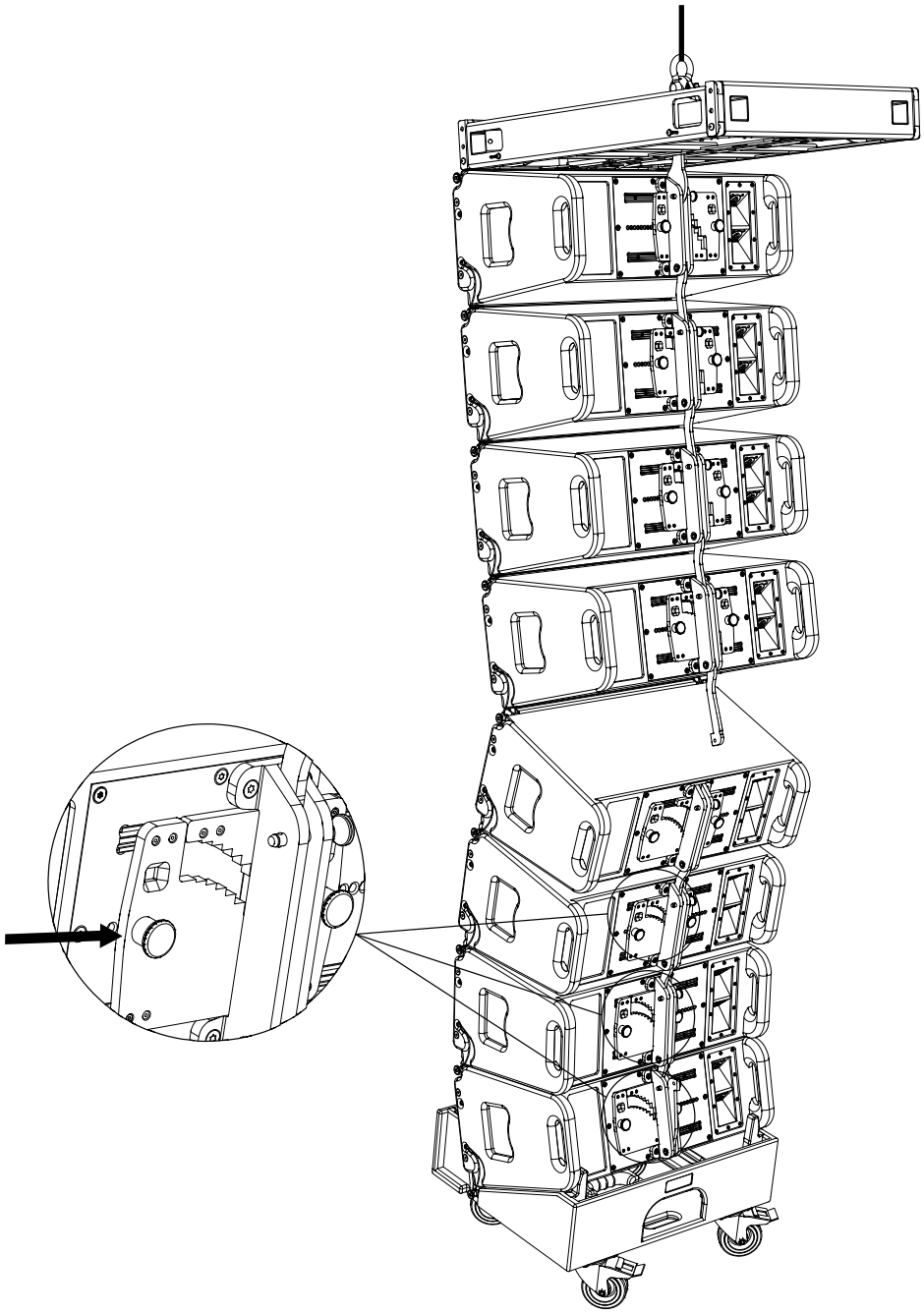

Figure 4.20.5 – moving the left slider

WARNING

11. With the aid of a second person, lift the second speaker set until the hook of the bottom speaker of the first speaker set meets the rear rigging of the top speaker of the second speaker set.

12. Insert the quick-locking pin on the main carrier of the back rigging of the top loudspeaker in the second VERA20 speaker set so that the hook is fixed.

13. Make sure that all quick-locking pins are always completely inserted!

14. Move the left hand slider on the top speaker of the second speaker set to the right until it displays the same angle value as the right hand slider. Now all speakers are securely mounted.

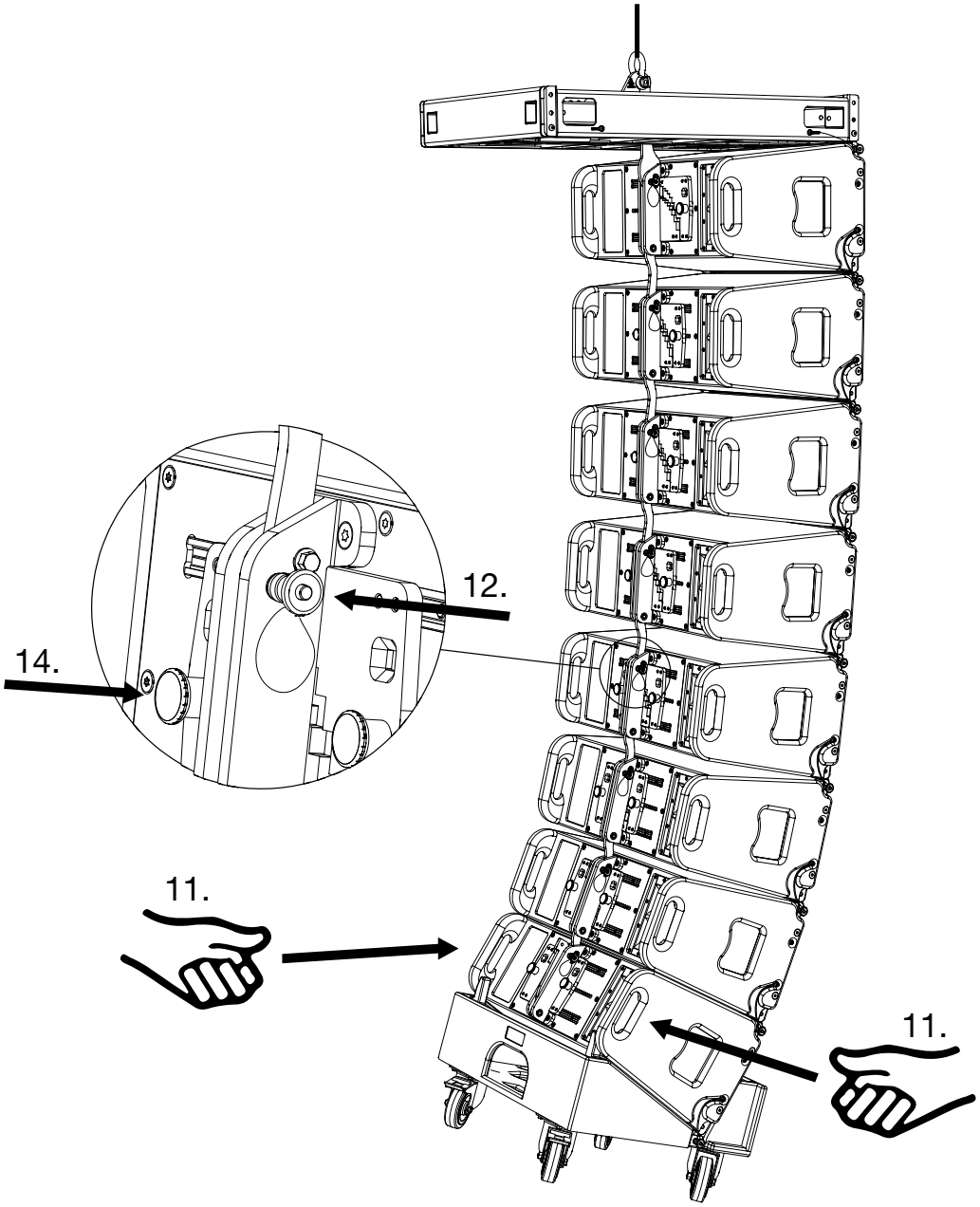

Figure 4.20.6 – Lifting the second speaker set

NOTE

15. Actuate the chain hoist and raise the VERA RF600 rigging frame with the VERA20 loudspeakers once more.

16. Hold the lower part of the transport dolly with one hand.

17. Remove both quick-locking pins on the left and right side of the transport dolly and place it on the ground.

18. Store the complete transport dolly in a safe place until reused.

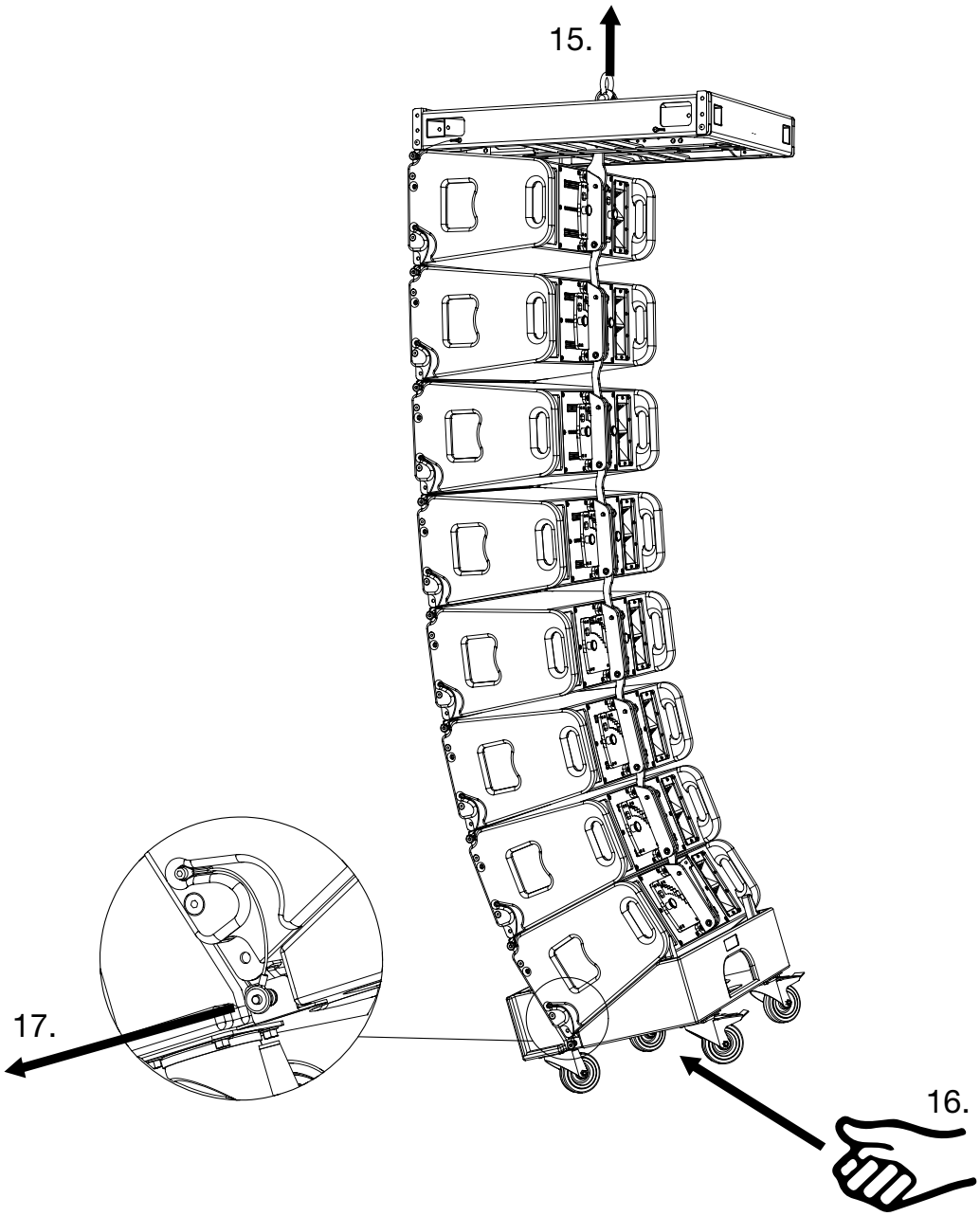

Figure 4.20.7 – Removing the dolly

WARNING

19. Follow the instructions in this section of the manual to connect up to 24 VERA20 speakers.

4.21 Flown system setup with VERA S32 loudspeakers

To set up the flown system with VERA S32 loudspeakers, proceed as follows:

WARNING

1. Please note that setting up the VERA RF600 rigging frame always requires two persons!

NOTE

2. Use the EASE Focus simulation software to determine the number of VERA S32 loudspeakers suitable for your application.

WARNING

3. Remove the covers from the CaseRF600 transport case.
4. Insert the hook of your chain hoist into the shackle of the VERA LA900 load adapter, which is mounted on the VERA RF600 rigging frame. The pin points suitable for your application have been previously selected.
5. Actuate the chain hoist and raise the VERA RF600 rigging frame carefully from the CaseRF600 transport case.

NOTE

6. Loosen all four quick-locking pins on the VERA RF600 rigging frame.
7. All four splay links in the front rigging rails must be extended downwards.Press down the locking levers on all castors with your foot.

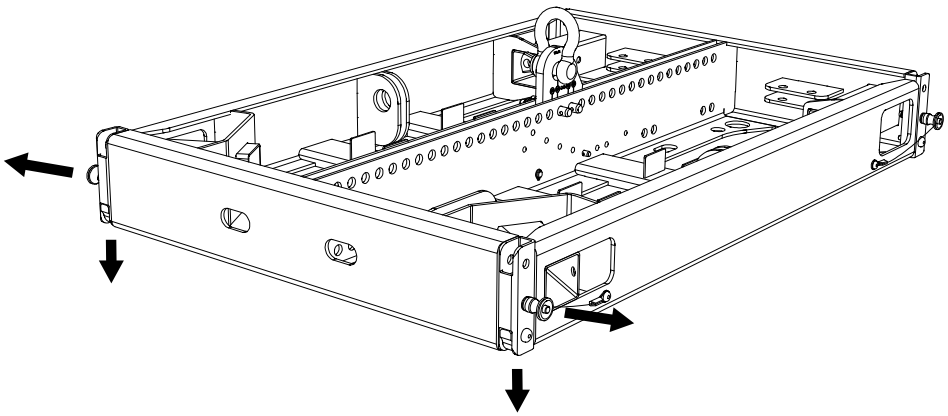

Figure 4.21.1 – VERA RF600 rigging frame

NOTE

8. This will secure the dolly from rolling away.

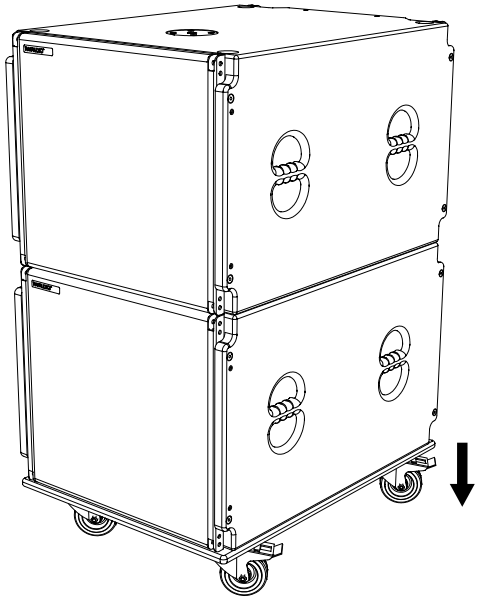

Figure 4.21.2 – VERA S32 loudspeaker on dolly

NOTE

9. Use a chain hoist to place the VERA RF600 rigging frame on top of the top VERA S32 loudspeaker.

10. The splay links of the flying track have to be inserted into the flying tracks of the loudspeaker!

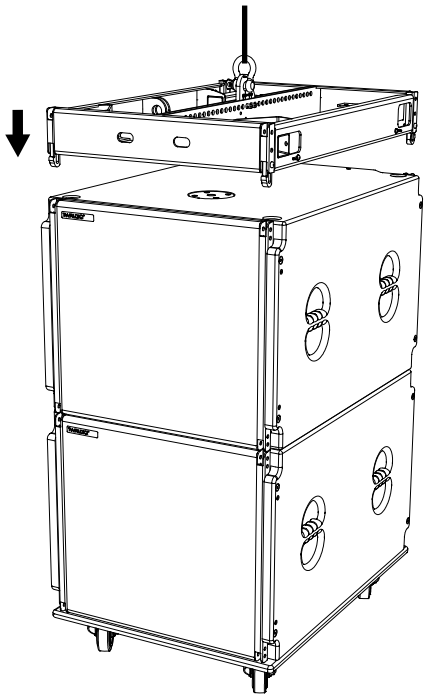

Figure 4.21.3 – Second VERA RF600 flight frame on top of VERA S32 loudspeaker

WARNING

11. Insert all four quick-locking pins on the rigging frame into the upper holes of the VERA S32 loudspeaker's flying track.

12. Make sure that all quick-locking pins are always completely inserted!

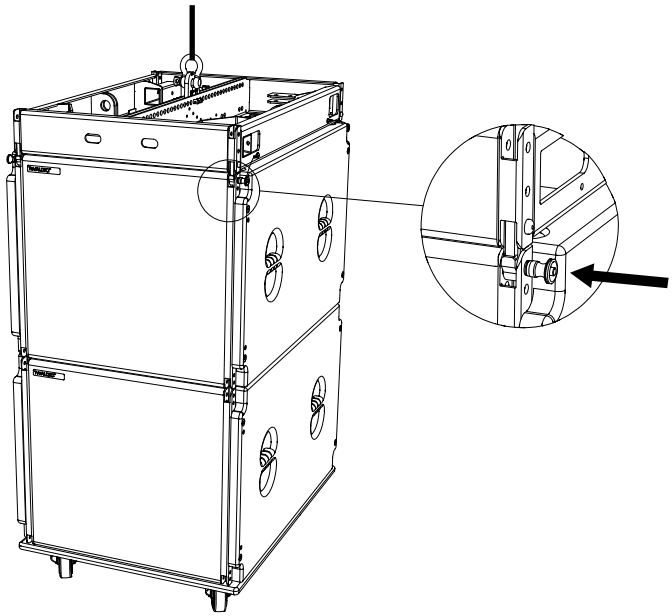

Figure 4.21.4 – Inserting the quick-locking pins

WARNING

13. Actuate the chain hoist and raise the VERA RF600 rigging frame with the VERA S32 loudspeaker so that the loudspeakers lifts off the ground.

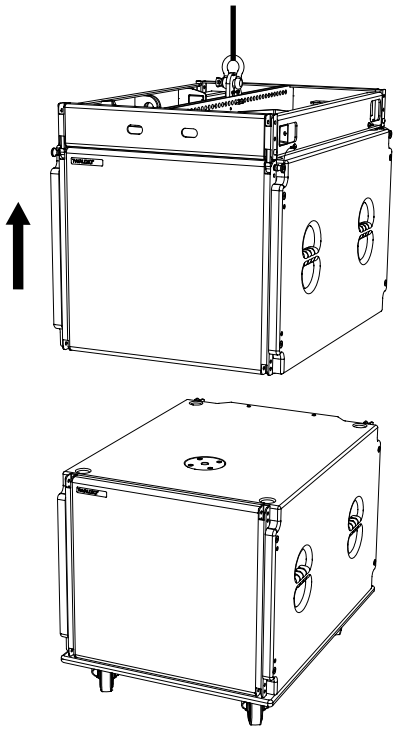

Figure 4.21.5 – Raising the upper VERA S32 loudspeaker

4.22 Flown system setup with VERA S32 loudspeakers, from the second speaker

To set up the ground stack array, starting from the second VERA S32 loudspeaker, proceed as follows:

WARNING

1. Please note that setting up the VERA RF600 rigging frame always requires two persons!

NOTE

2. Loosen all quick-locking pins on all four box link connectors of the BLS box link set.

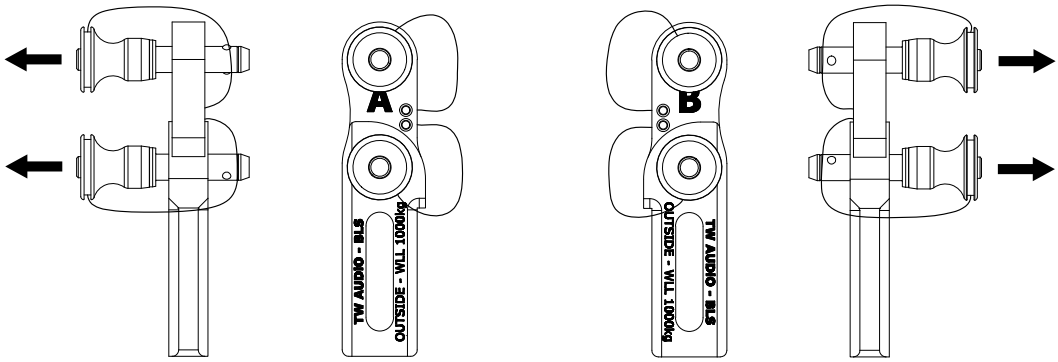

Figure 4.22.1 – BLS Box link set

NOTE

3. Insert all four box link connectors from the box link set into the flying tracks of the VERA S32 loudspeaker.

4. Pay attention to the alignment of each box link connector. The “OUTSIDE” labels on all box link connectors must be visible from outside.

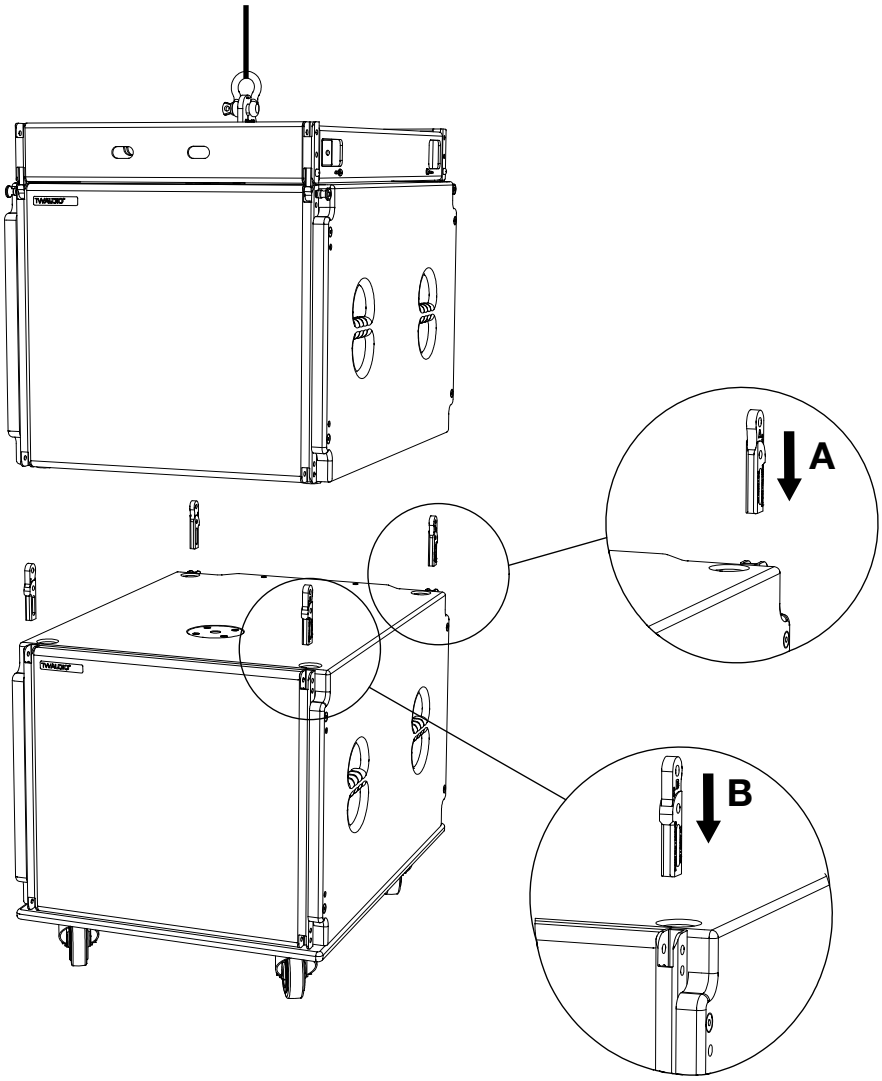

Figure 4.22.2 – Box link connectors in VERA S32 loudspeaker (top)

WARNING

5. Insert all lower box link connector quick-locking pins into the upper holes of the VERA S32 loudspeaker's flying track.

6. Make sure that all quick-locking pins are always completely inserted!

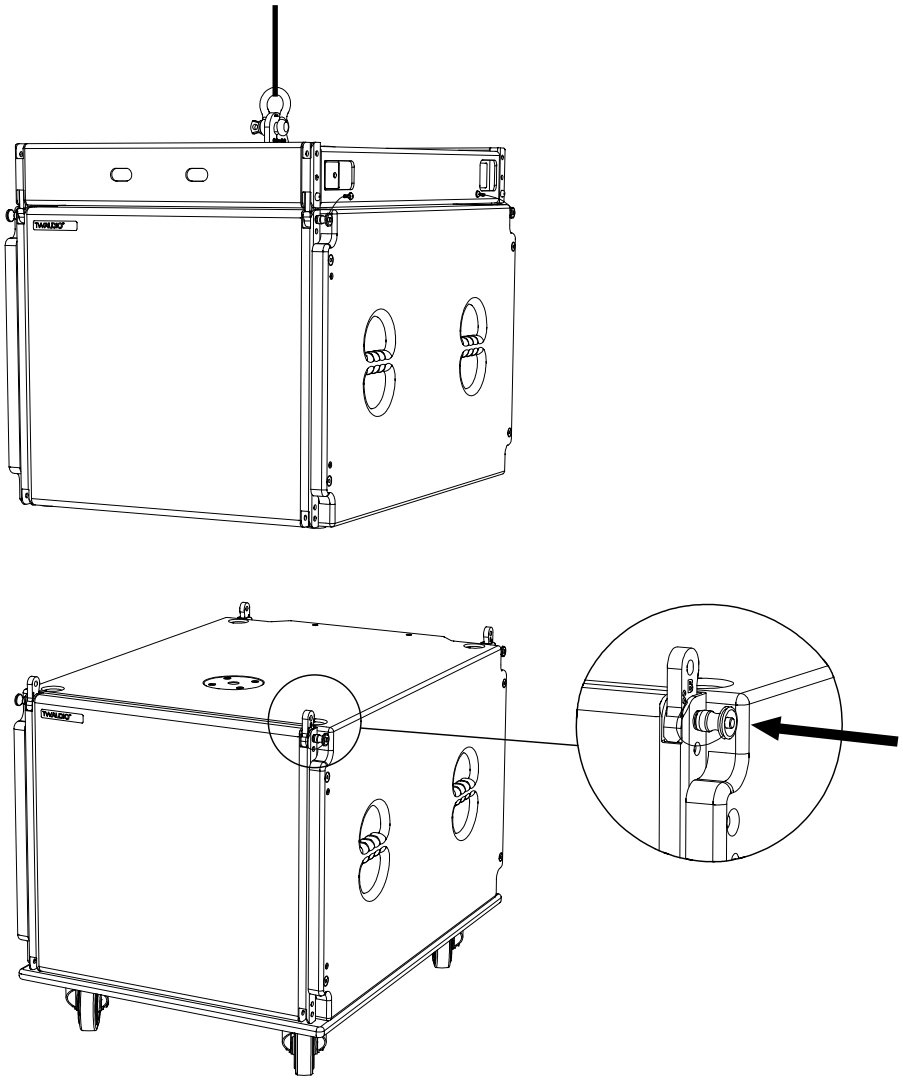

Figure 4.22.3 – Box link connectors in VERA S32 loudspeaker (top)

WARNING

7. Use a chain hoist to place the first VERA S32 loudspeaker on top of the second loudspeaker.

8. The box link connectors have to be inserted into the flying tracks of the upper loudspeaker!

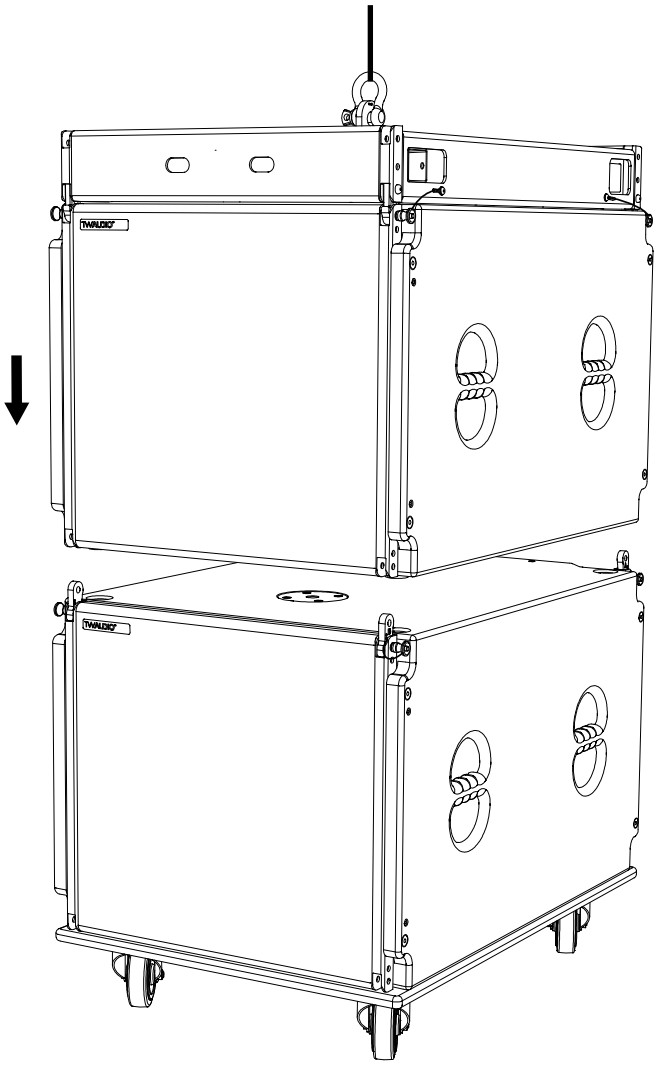

Figure 4.22.4 – First VERA S32 speaker on top of second speaker

WARNING

9. Insert the secondary box link connector quick-locking pins into the lower holes of the upper VERA S32 loudspeaker's flying track.

10. Make sure that all quick-locking pins are always completely inserted!

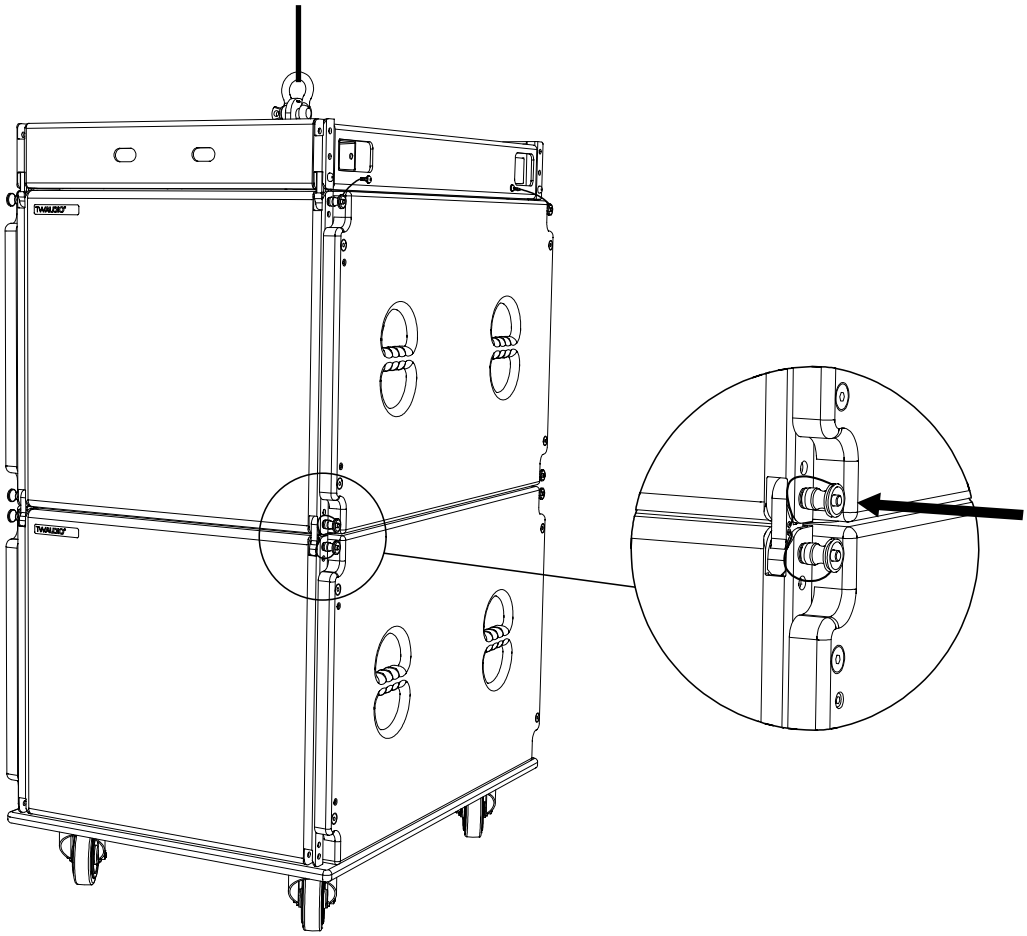

Figure 4.22.5 – Inserting the quick-lock pins

WARNING

11. Use a chain hoist to lift the VERA S32 loudspeakers.

12. Release the locking levers on all castors with your foot.

13. Store the complete transport dolly in a safe place until reused.

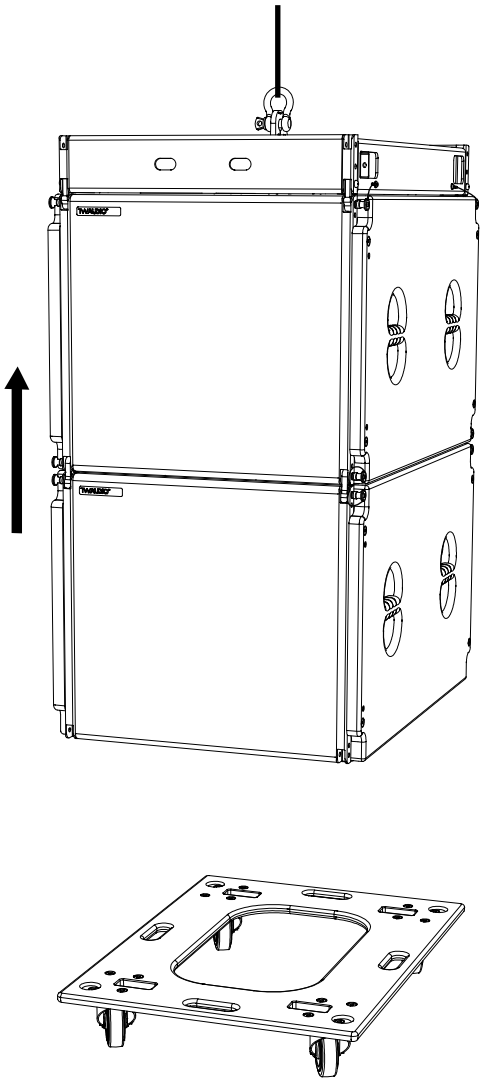

Figure 4.22.6 – Removing the Dolly

WARNING

14. Follow the instructions in this section of the manual to connect additional VERA S32 speakers.

4.23 Flown mixed system setup with VERA20 and VERA S32 loudspeakers

To set up the flown system with VERA20 and VERA S32 loudspeakers, proceed as follows:

WARNING

1. Please note that setting up the VERA RF600 rigging frame always requires two persons!

NOTE

2. Use the EASE Focus simulation software to determine the number of VERA20 and VERA S32 loudspeakers suitable for your application.

WARNING

3. When setting up a mixed flown system, proceed according to sections 4.21 and 4.22 in this manual. The pin points suitable for your application have been previously selected.

NOTE

4. Loosen all quick-locking pins on all four box link connectors of the BLS box link set.

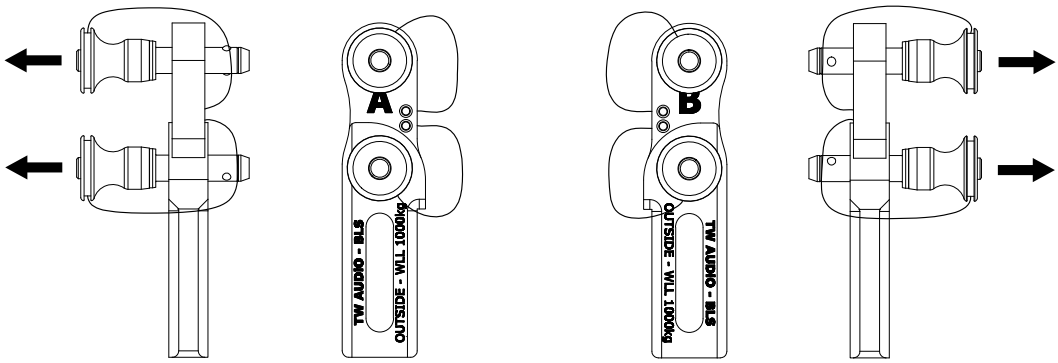

Figure 4.23.1 – BLS Box link set

NOTE

5. Insert all four box link connectors from the box link set into the flying tracks of the VERA S32 loudspeaker.

6. Pay attention to the alignment of each box link connector. The “OUTSIDE” labels on all box link connectors must be visible from outside.

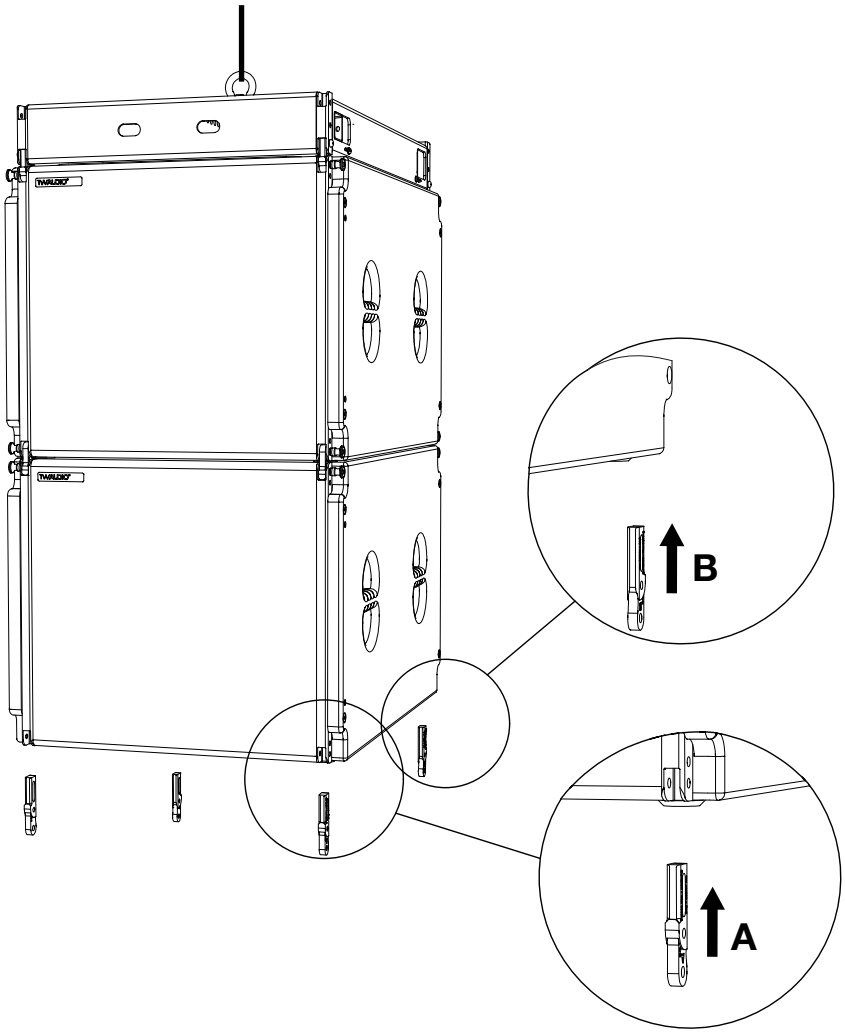

Figure 4.23.2 - BLS in VERA S32 loudspeaker

WARNING

7. Insert the secondary box link connector quick-locking pins into the lower holes of the lower VERA S32 loudspeaker's flying track.

8. Make sure that all quick-locking pins are always completely inserted!

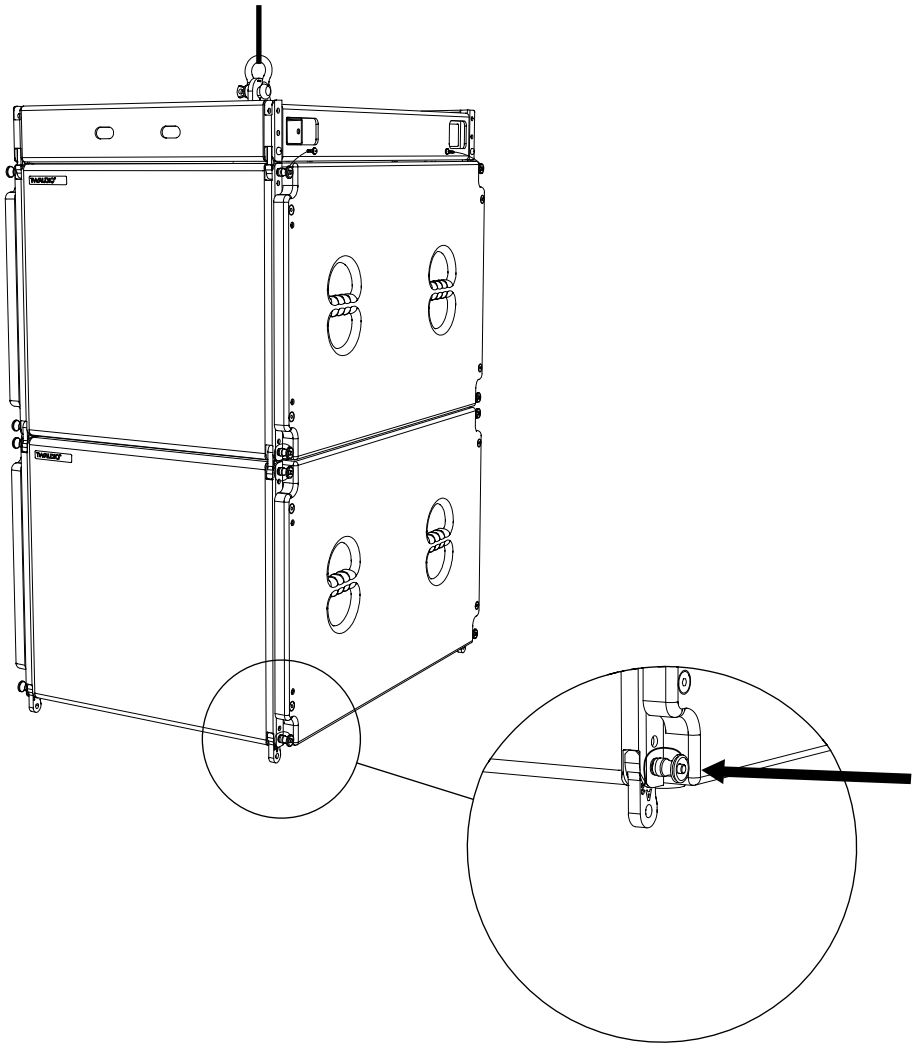

Figure 4.23.3 – BLS in VERA S32 loudspeaker

WARNING

9. Place another VERA RF600 rigging frame under the existing system structure.
10. Use a chain hoist to place the VERA S32 loudspeaker on top of the second rigging frame.
11. The box link connectors have to be inserted into the flying tracks of the second frame!

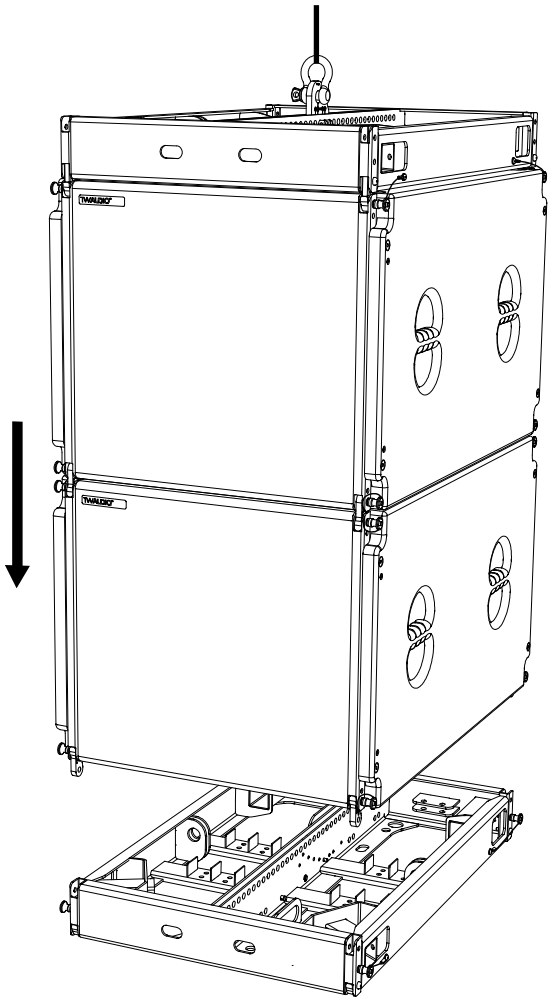

Figure 4.23.4 – second VERA RF600 rigging frame

WARNING

12. Insert the secondary box link connector quick-locking pins into the lower holes of the upper holes of the lower VERA RF600 rigging frame's flying track.

13. Make sure that all quick-locking pins are always completely inserted!

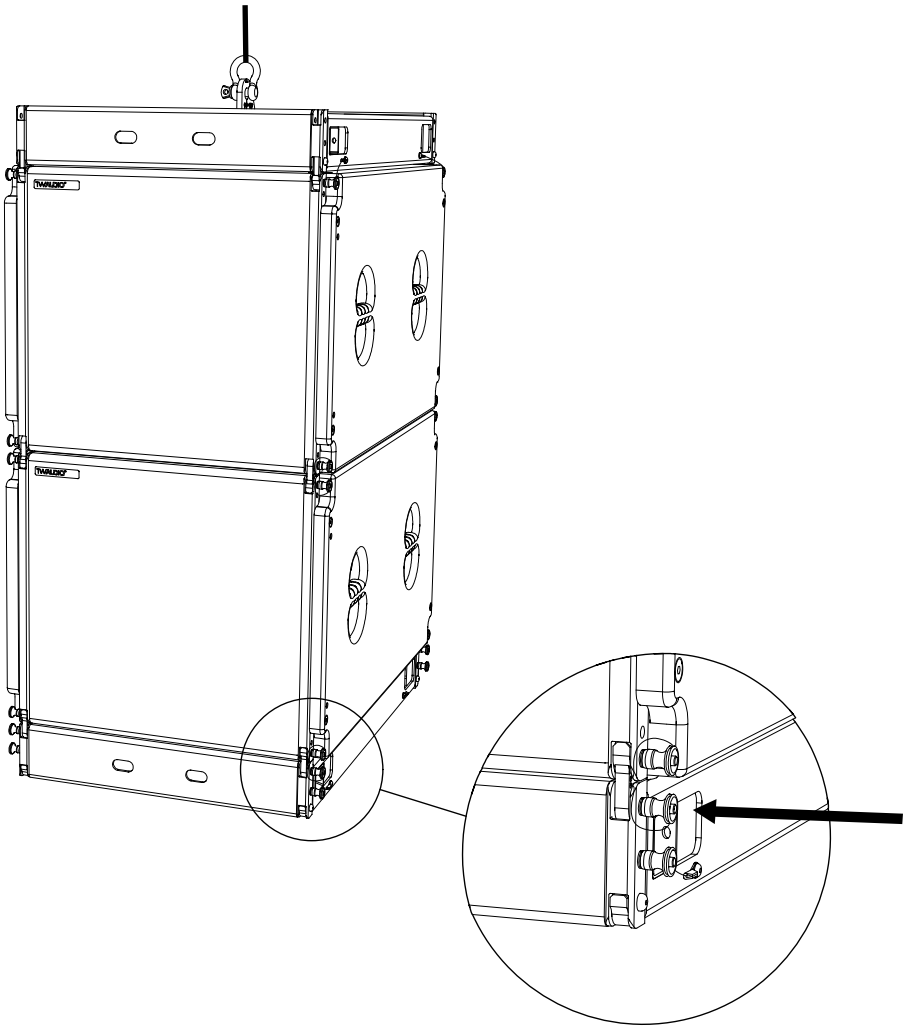

Figure 4.23.5 – Inserting the quick-locking pins

WARNING

14. Continue setting up the mixed flown system as described in sections 4.19 and 4.20 in this manual.

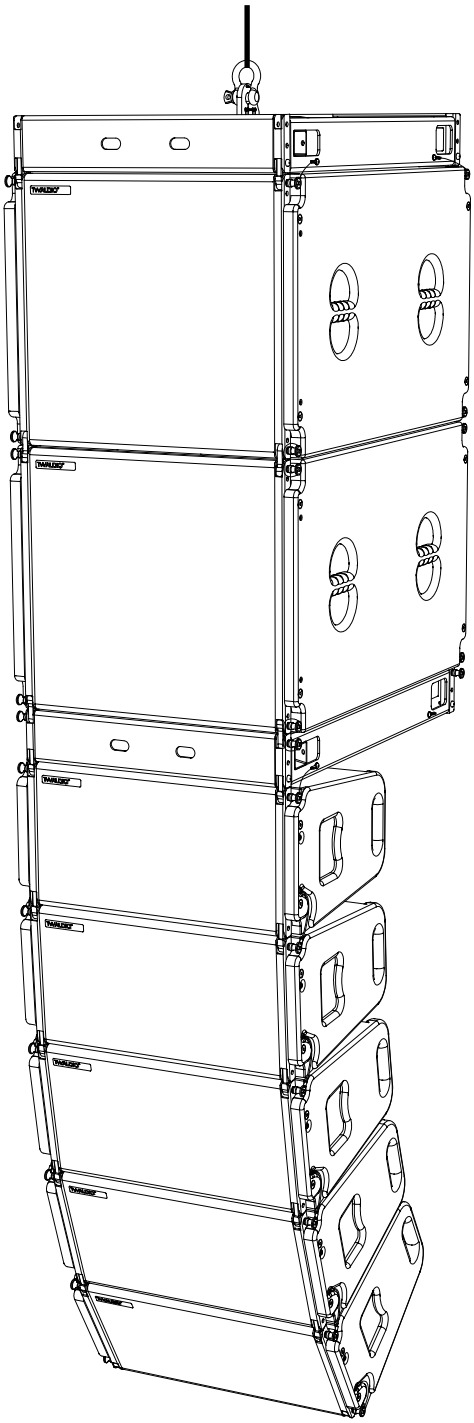

Figure 4.23.6 – Flown system proposal

4.24 De-Rigging a flown system with VERA20 loudspeakers

To de-rig the VERA20 loudspeaker system, proceed as follows:

WARNING

1. Please note that de-rigging the VERA RF600 rigging frame always requires two persons!

NOTE

2. Prepare the required number of VERA DLV20 transport dollies and Cover4V20 covers in advance.
3. Depending on the size of your system setup, remove the bottom speaker cords. Then proceed to remove the remaining speaker cables.

WARNING

4. Above all, make sure that no persons are directly within the danger zone or in its immediate vicinity when the system structure is lowered!

WARNING

5. Make sure that there no diagonal pull forces are applied to the system structure during de-rigging!

WARNING

6. Actuate the chain hoist and lower the VERA RF600 rigging frame with the VERA20 loudspeakers to working height.
7. Bring the lower part of the transport dolly with one hand to your system structure.
8. Insert both quick-locking pins into the left and right side of the transport dolly.
9. Make sure that all quick-locking pins are always completely inserted!

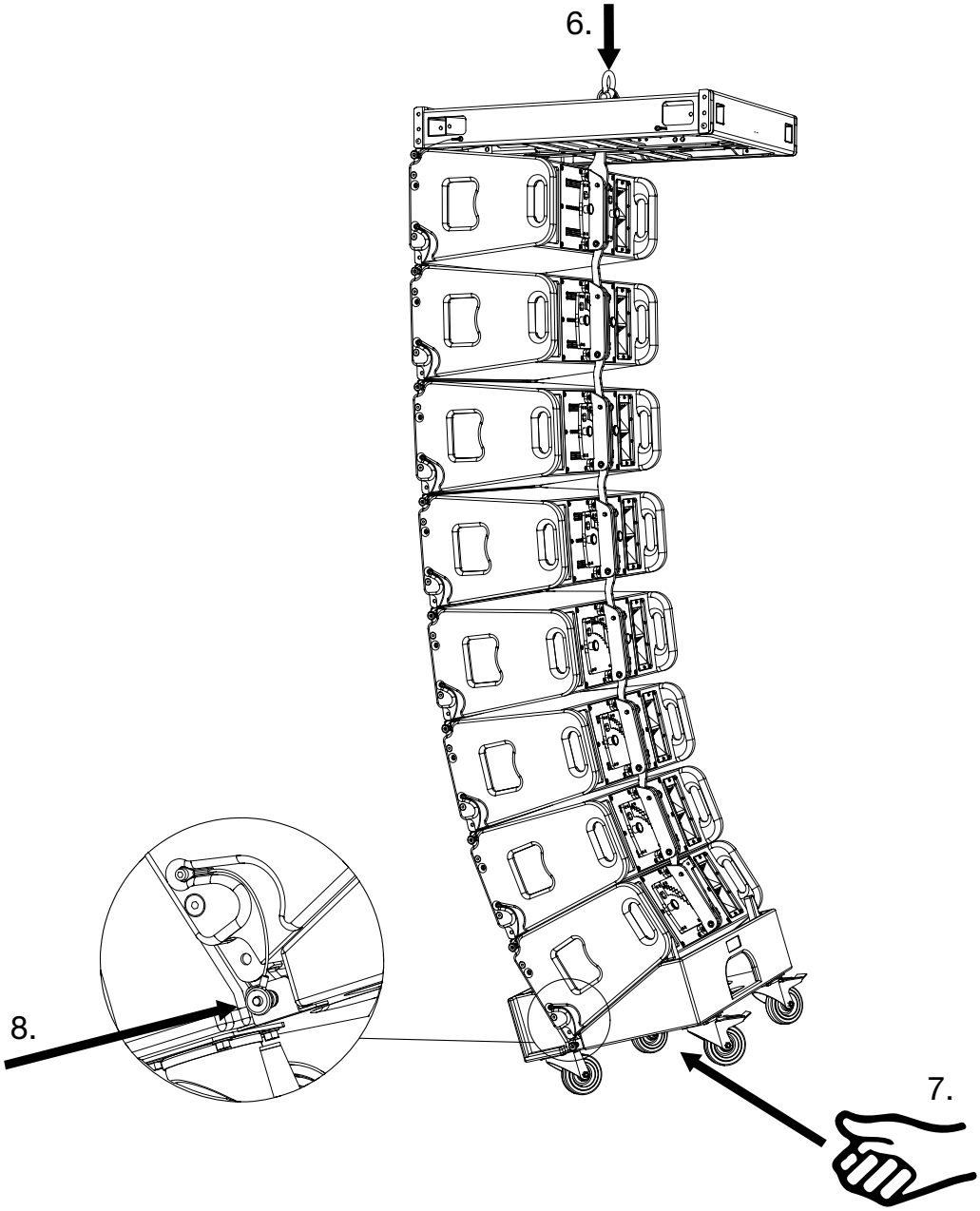

Figure 4.24.1 - Attaching the dolly to the system structure

WARNING

10. Move the left hand slider on the top speaker of the second speaker set fully to the left.

11. Actuate the chain hoist and lower the VERA RF600 rigging frame with the VERA20 loudspeakers once more.

12. With the aid of a second person, lift the second speaker set.

13. Remove the quick-locking pin on the main carrier of the back rigging of the top loudspeaker in the second VERA20 speaker set so that the hook is unlocked.

14. With the aid of a second person, put down the second speaker set.

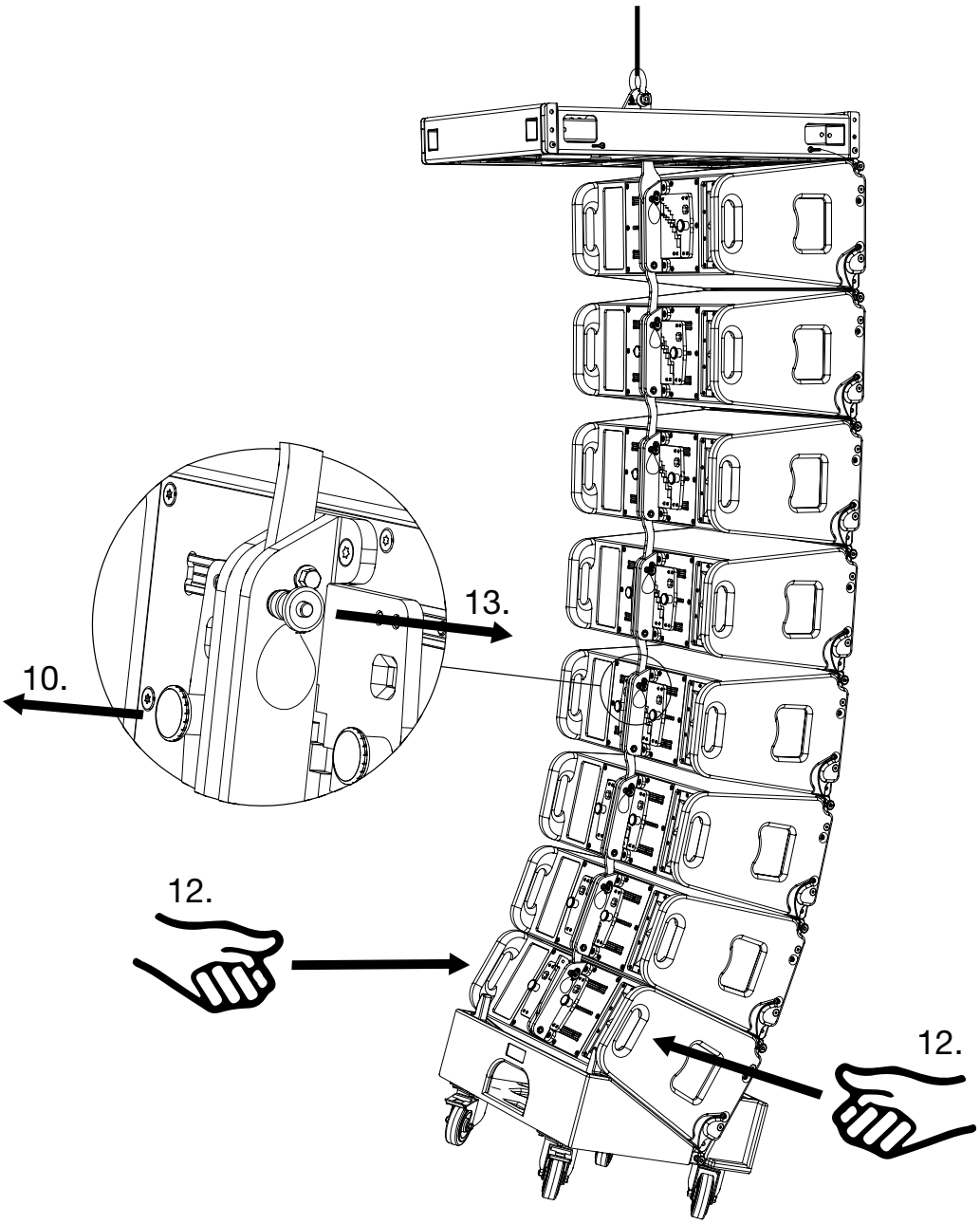

Figure 4.24.2 - De-rigging the second speaker package

NOTE

15. Raise the hook on the main carrier of the rear rigging of the bottom loudspeaker in the first speaker set all the way up.

WARNING

16. Insert the quick-locking pin into the main carrier of the back rigging of the top loudspeaker in the second speaker set.

17. Make sure that all quick-locking pins are always completely inserted!

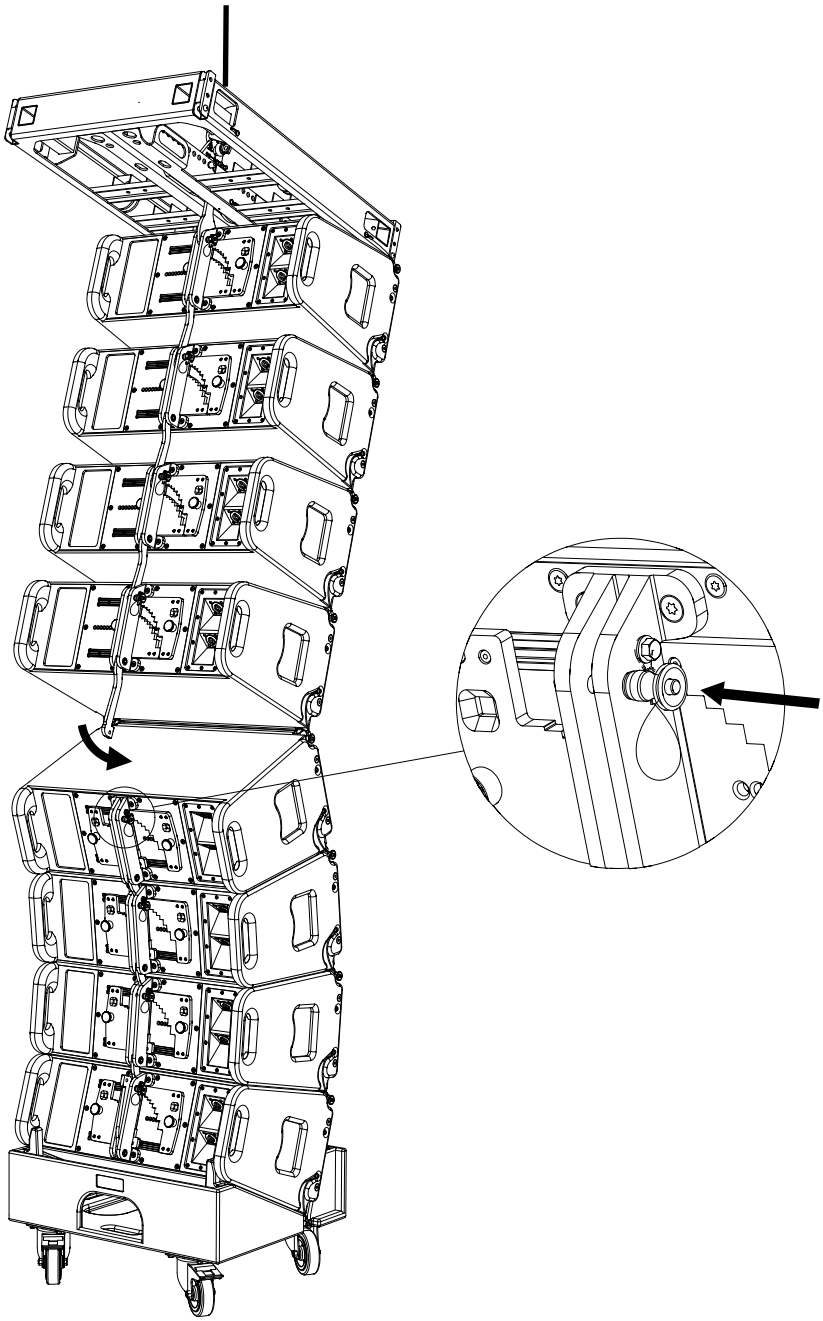

Figure 4.24.3 – Raising the hook and inserting quick-locking pins

NOTE

18. Slide the left sliders of the loudspeakers all the way to the left.

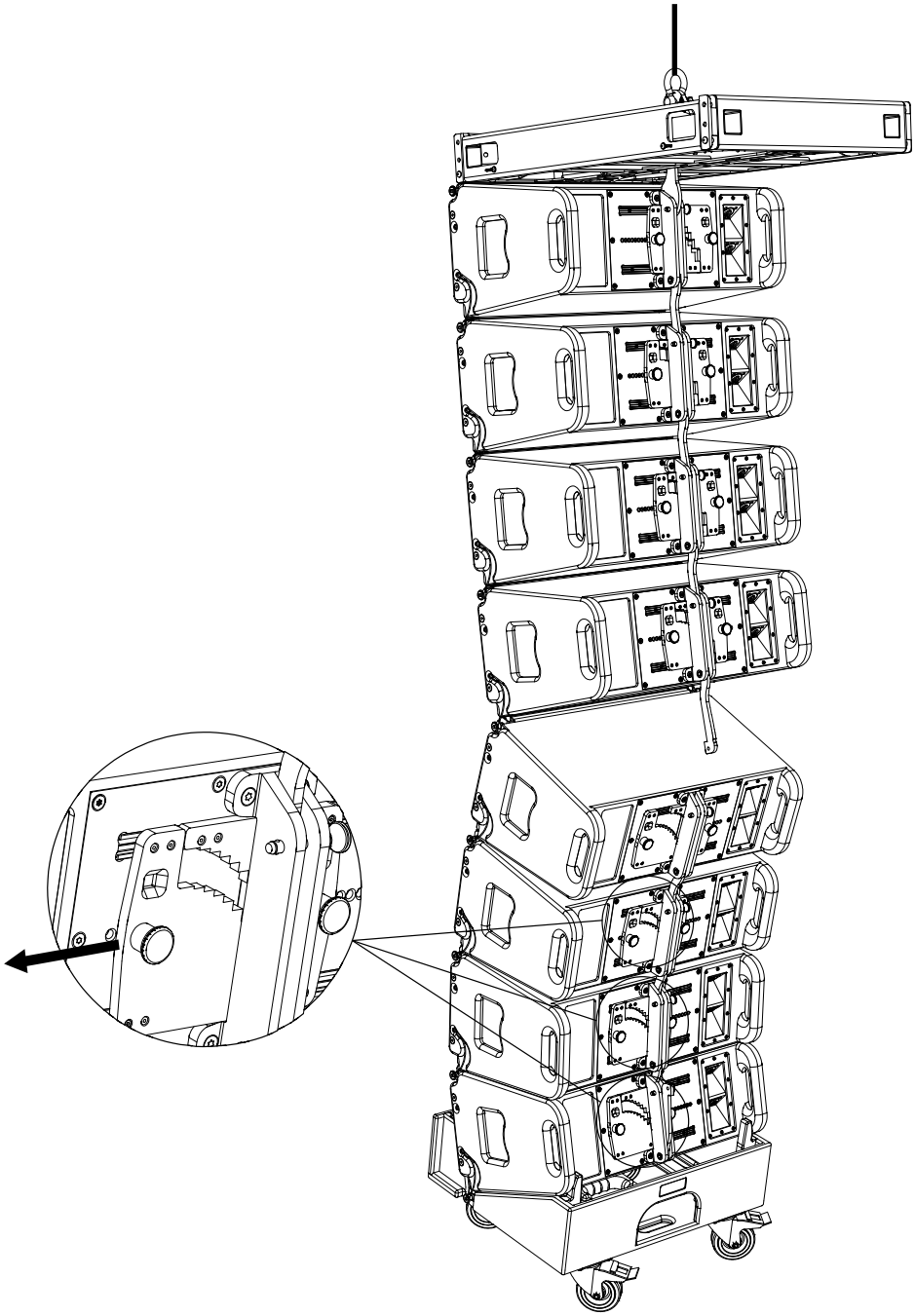

Figure 4.24.4 – Moving the left sliders

WARNING

19. Actuate the chain hoist and set down the system structure on the ground.

NOTE

20. Loosen the two front quick-locking pins and move the detached loudspeaker set aside.

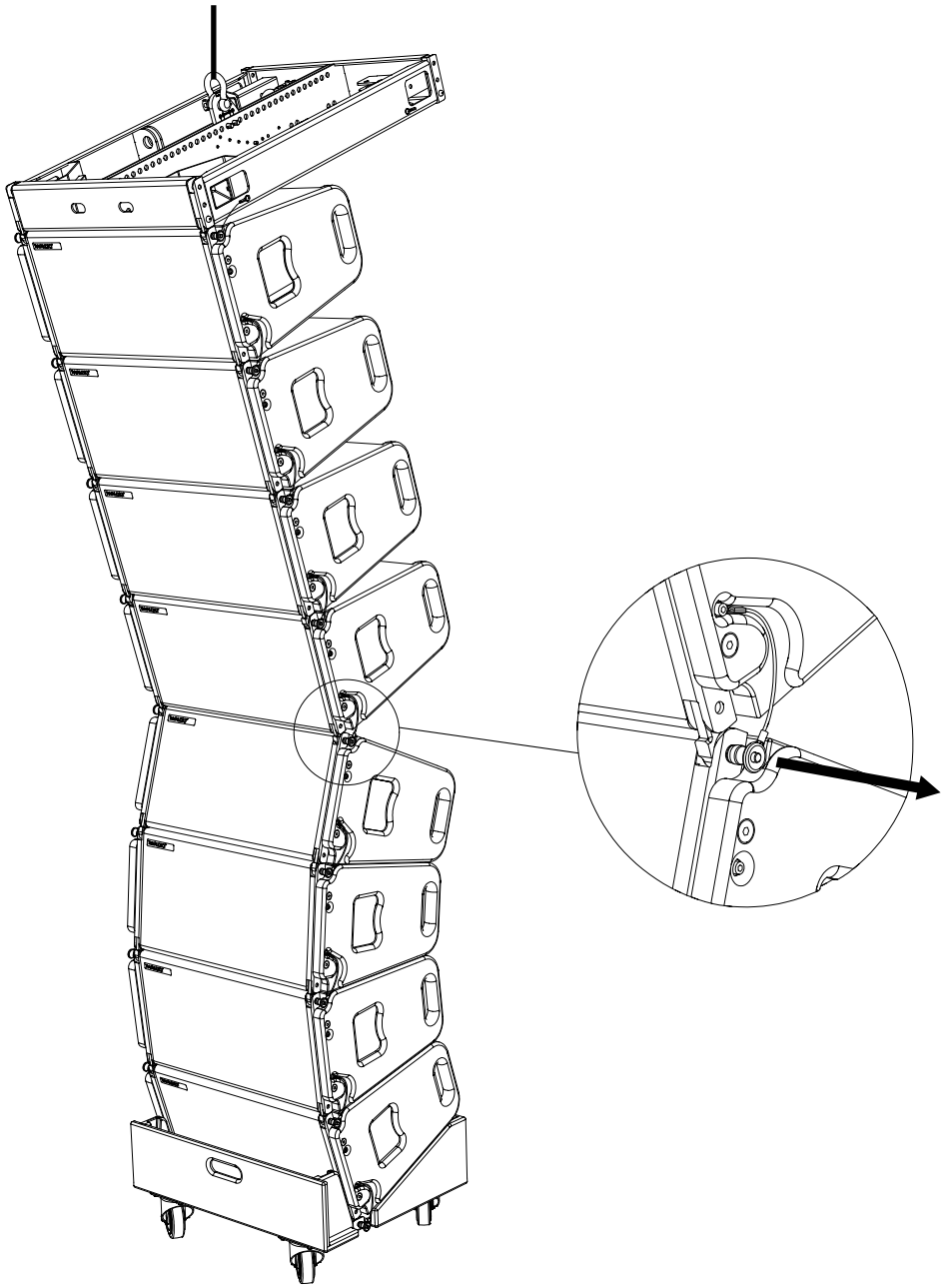

Figure 4.24.5 – Releasing the quick-locking pins

WARNING

21. Actuate the chain hoist and lower the VERA RF600 rigging frame with the VERA20 loudspeakers to working height.

22. Bring the lower part of the transport dolly with one hand to your system structure.

23. Insert both quick-locking pins into the left and right side of the transport dolly.

24. Make sure that all quick-locking pins are always completely inserted!

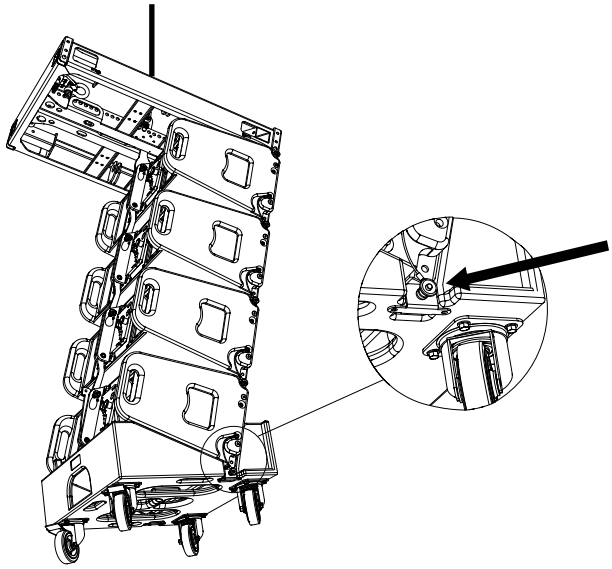

Figure 4.24.6 – Attaching the dolly to the system structure

NOTE

25. Slide the left sliders of all loudspeakers all the way to the left.

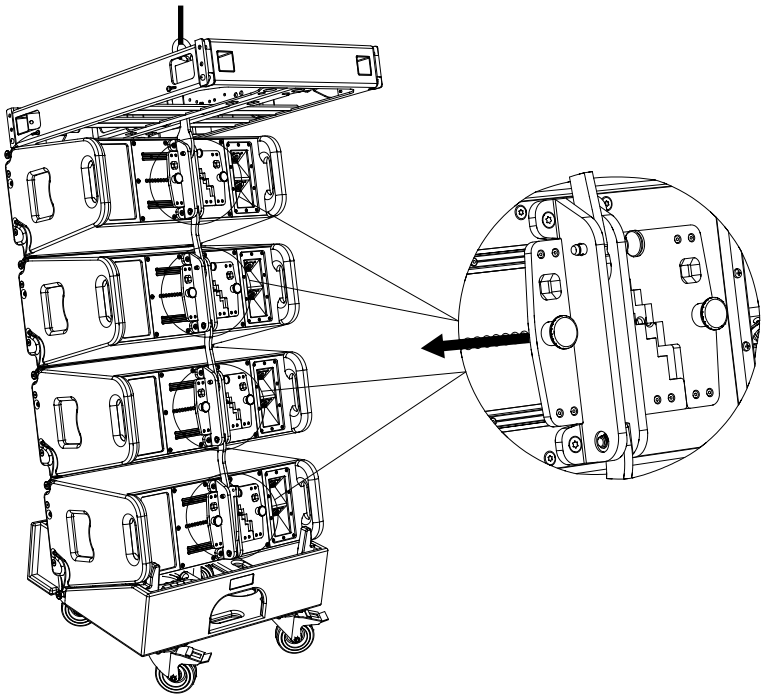

Figure 4.24.7 – moving the left sliders

WARNING

26. Actuate the chain hoist and set down the system structure on the ground.

NOTE

27. Loosen the quick-locking pin of the hook on the VERA RF600 rigging frame.

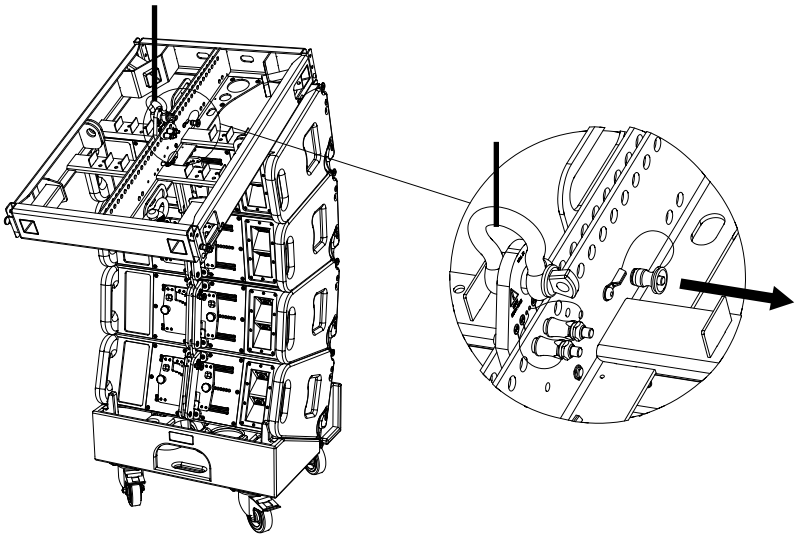

Figure 4.24.8 – Releasing the quick-locking pins

NOTE

28. Loosen the quick-locking pin on the main carrier of the upper VERA20 loudspeaker's back rigging.

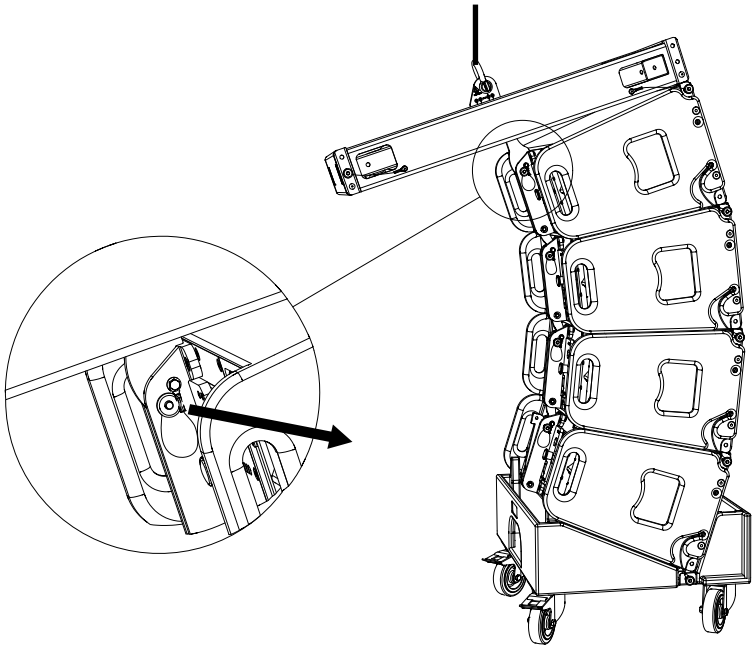

Figure 4.24.9 – Releasing the quick-locking pins

NOTE

29. Lift the VERA RF600 rigging frame horizontally and fold in the hook on the VERA RF600 rigging frame.

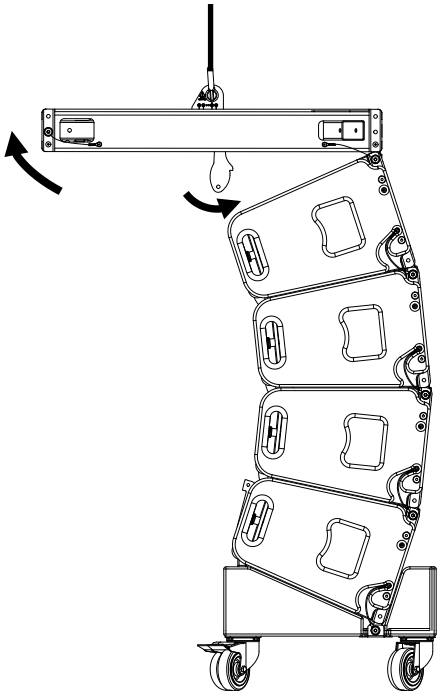

Figure 4.24.10 – Folding in the hook

WARNING

30. Reinsert the quick-locking pin of the hook on the VERA RF600 rigging frame into its position so that the hook is secured.

31. Make sure that all quick-locking pins are always completely inserted!

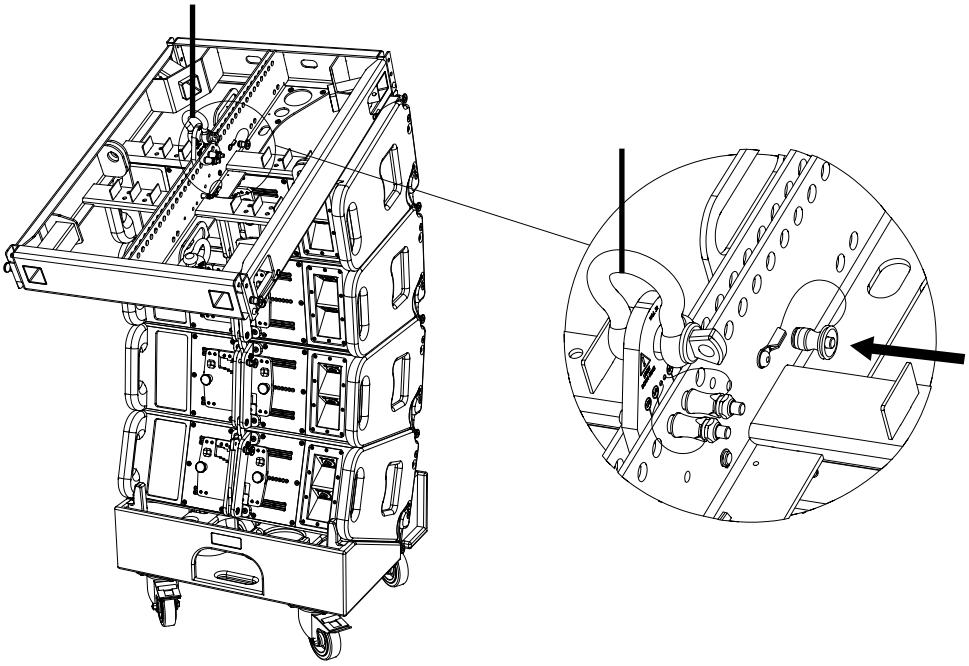

Figure 4.24.11 – Inserting the quick-locking pins

NOTE

32. Loosen the two front quick-locking pins on the left and right side of the VERA RF600 rigging frame and move the detached loudspeaker set aside.

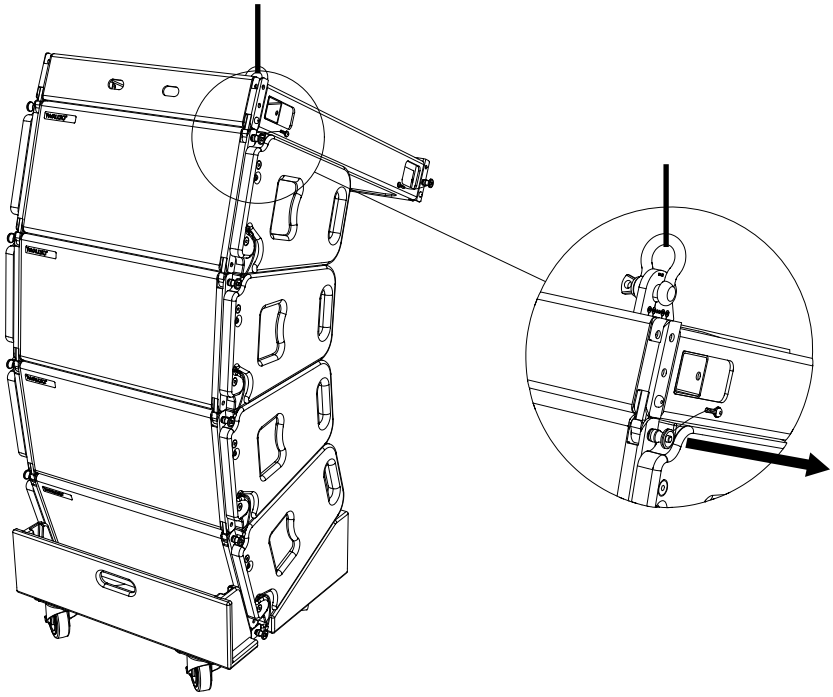

Figure 4.24.12 – Releasing the quick-locking pins

WARNING

33. Insert the quick-locking pin into the main carrier of upper VERA20 loudspeakers' back rigging so that all three hooks are fixed.

34. Make sure that all quick-locking pins are always completely inserted!

WARNING

35. Push all slides on the right completely to the left, so that the back rigging is closed.

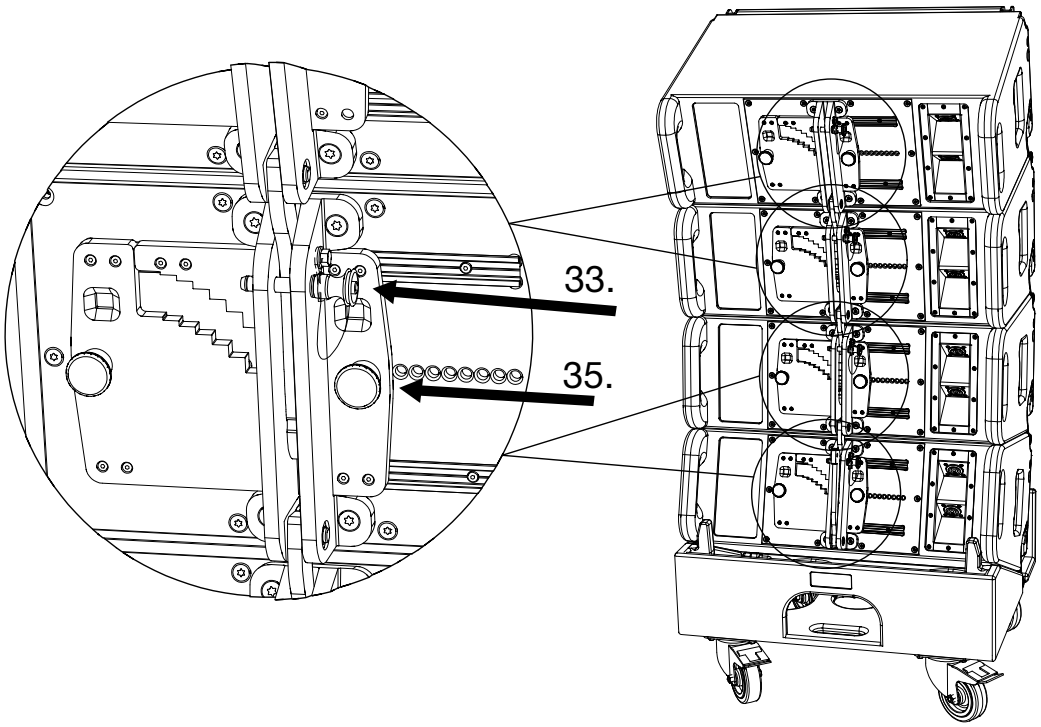

Figure 4.24.13 – Inserting quick-locking pins and closing the slides

WARNING

36. Make sure that the top three hooks attach to the support plate, that all quick-locking pins have been pushed through completely and that all right slides are closed! This ensures that all VERA20 loudspeakers and the VERA DLV20 transport dolly form a firmly connected unit.

NOTE

37. Fold back the hook on the back rigging of the bottom speaker so that it rests against the quick-locking pin.

NOTE

38. Insert the two front splay links into the rigging rails and insert the two quick-locking pins into the VERA RF600 rigging frame.

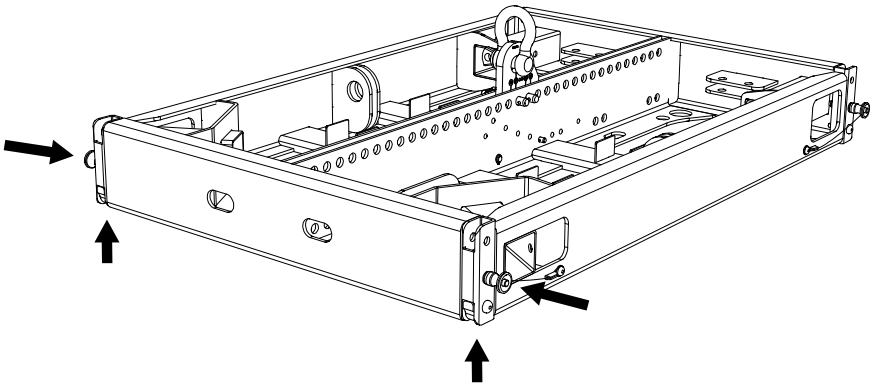

Figure 4.24.14 – VERA RF600 rigging frame

WARNING

39. Actuate the chain hoist and lower the VERA RF600 rigging frame carefully into the CaseRF600 transport case.

40. Remove the hook of your chain hoist from the shackle of the VERA LA900 load adapter, which is mounted on the VERA RF600 rigging frame.

41. Attach the cover to the CaseRF600 transport case.

NOTE

42. Remove both locking pins on the left and right of the VERA DLV20 transport dolly's top.

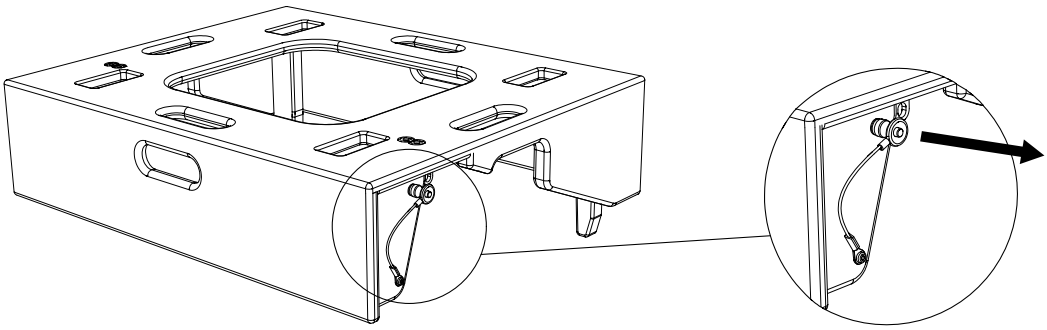

Figure 4.24.15 – VERA DLV20 transport dolly top section

NOTE

43. Put the top section of the transport dolly onto your system structure.

WARNING

44. Insert the two locking pins of the VERA DLV20 transport dolly into the holes of the upper VERA20 loudspeaker.

45. Make sure that all quick-locking pins are always completely inserted!

NOTE

46. Pull the Cover4V20 cover over the transport dolly and close it.

47. Lift the locking levers on the two castors with your foot. This will unlock the dolly.

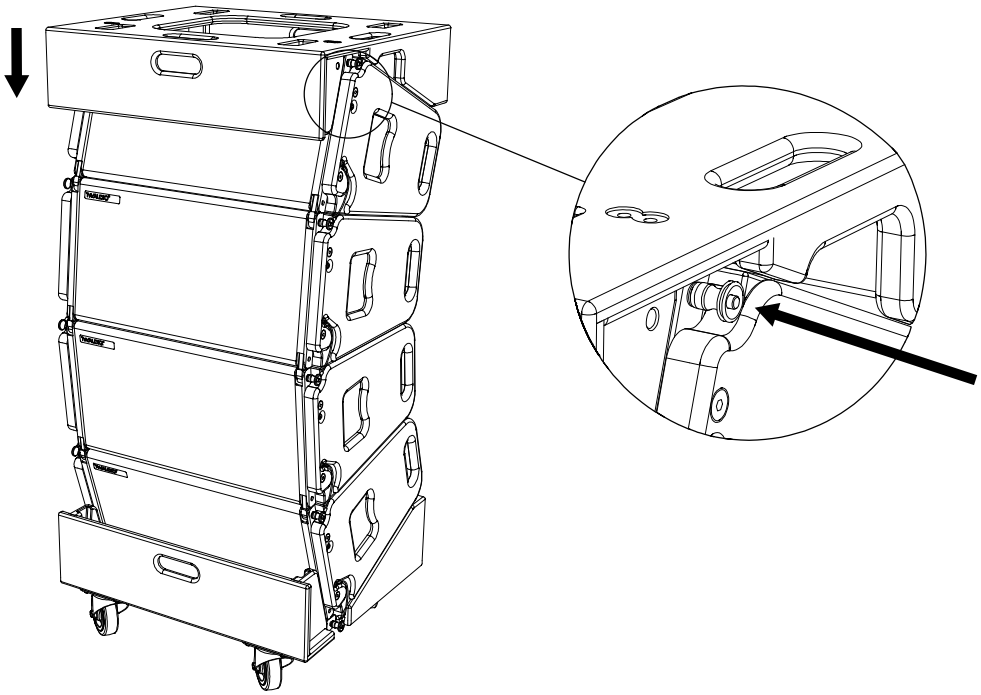

Figure 4.24.16 – VERA DLV20 transport dolly fully assembled

4.25 De-rigging a flown system with VERA S32 loudspeakers

To de-rig the flown system with VERA S32 loudspeakers, proceed as follows:

WARNING

1. Please note that de-rigging the VERA RF600 rigging frame always requires two persons!

NOTE

2. Prepare the required number of QDB18 transport dollies and Cover2S32 covers in advance.
3. Depending on the size of your system setup, remove the bottom speaker cords. Then proceed to remove the remaining speaker cables.

WARNING

4. Above all, make sure that no persons are directly within the danger zone or in its immediate vicinity when the system structure is lowered!

WARNING

5. Make sure that there no diagonal pull forces are applied to the system structure during de-rigging!

WARNING

6. Use a chain hoist to lower the VERA S32 loudspeaker onto a QDB18 transport dolly.
7. Press down the locking levers on all castors with your foot. This will secure the dolly from rolling away.

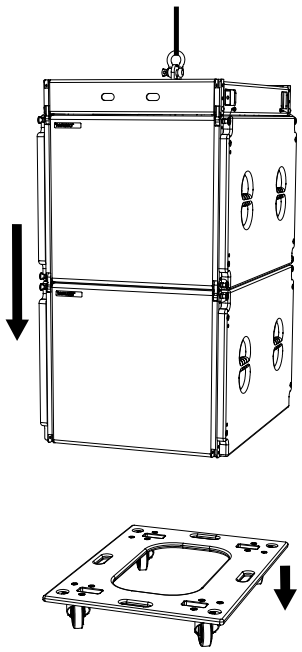

Figure 4.25.1 – Placing the loudspeaker on the dolly

NOTE

8. Remove all box link connector quick-locking pins.

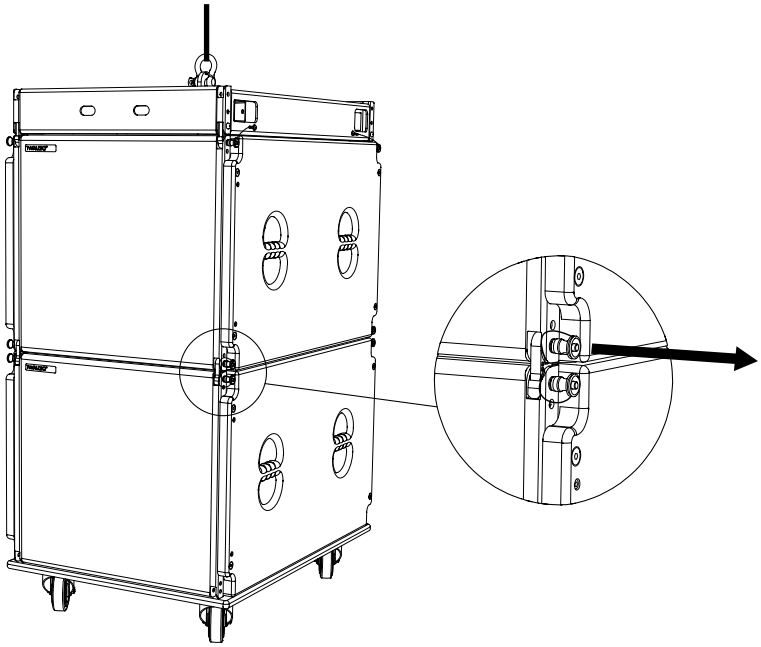

Figure 4.25.2 – Removing the quick-locking pins

WARNING

9. Lift the upper VERA S32 loudspeaker using a chain hoist.

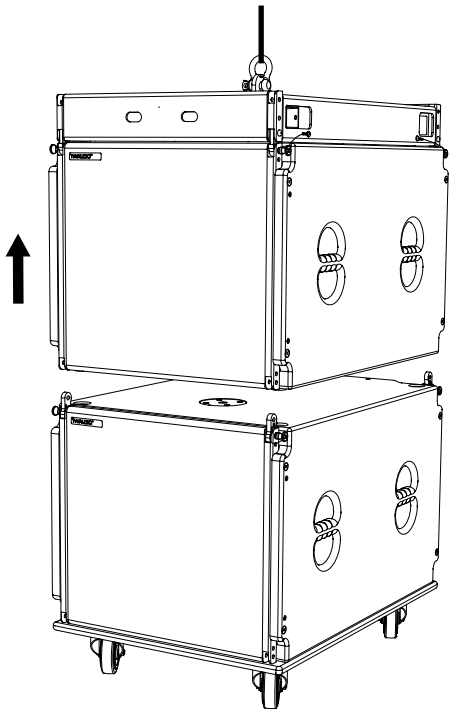

Figure 4.25.3 – Lifting the VERA S32 loudspeaker

WARNING

10. Use a chain hoist to lift the upper VERA S32 loudspeaker until the loudspeaker hangs free.

11. Remove the secondary box link connector quick-locking pins.

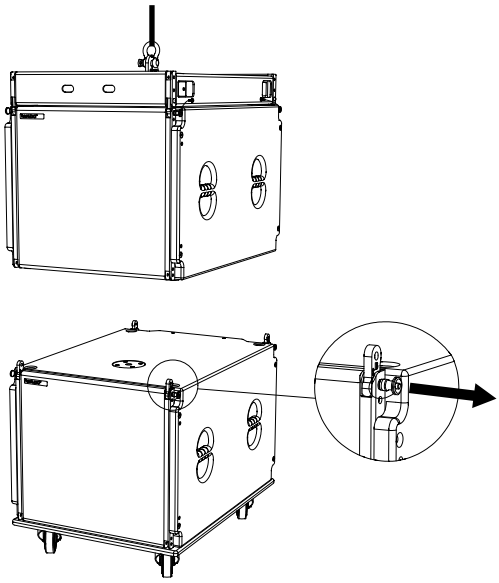

Figure 4.25.4 – Lifting the VERA S32 loudspeaker

NOTE

12. Remove all box link connectors.

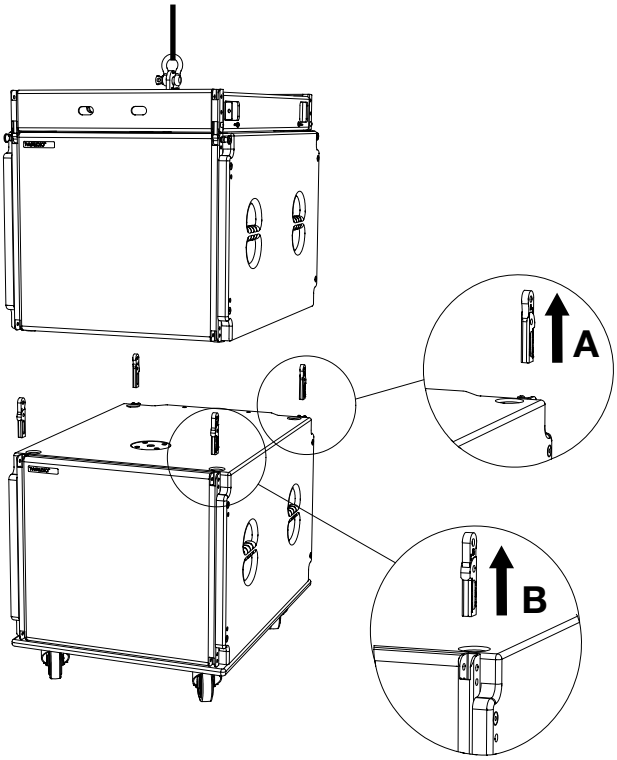

Figure 4.25.5 – Removing the box link connectors

WARNING

13. Actuate the chain hoist and lower the upper VERA S32 loudspeaker onto the lower loudspeaker.

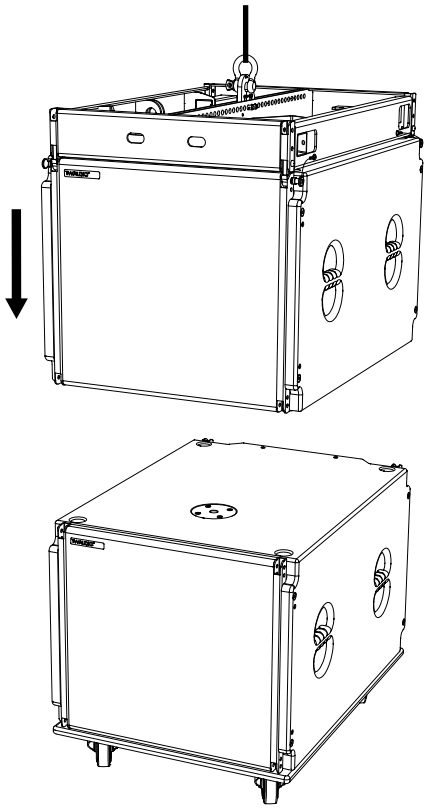

Figure 4.25.6 – VERA S32 loudspeaker on top of VERA S32 loudspeaker

WARNING

14. Follow the instructions in this section of the manual to de-rig additional VERA S32 speakers.

NOTE

15. Remove all four quick-locking pins on the rigging frame.

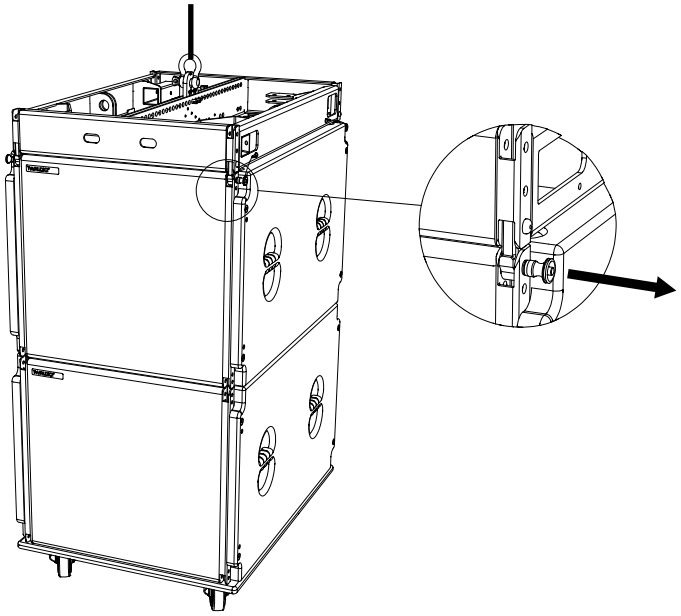

Figure 4.25.7 – Removing the quick-locking pins

NOTE

16. Actuate the chain hoist and raise the VERA RF600 rigging frame.

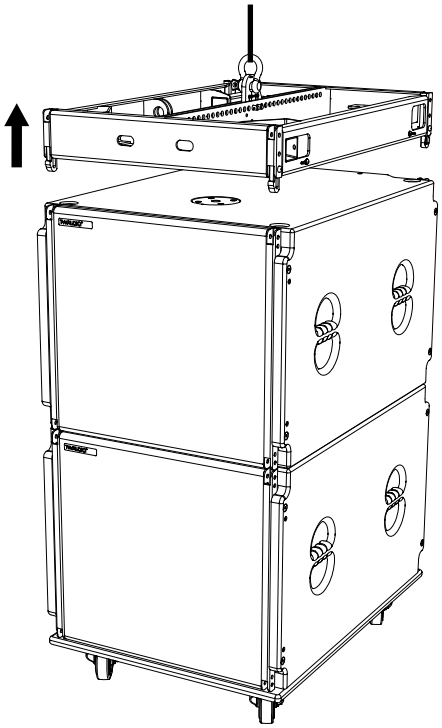

Figure 4.25.8 – Raising the VERA RF600 rigging frame

NOTE

17. Insert all splay links into the rigging rails and insert all quick-locking pins into the VERA RF600 rigging frame.

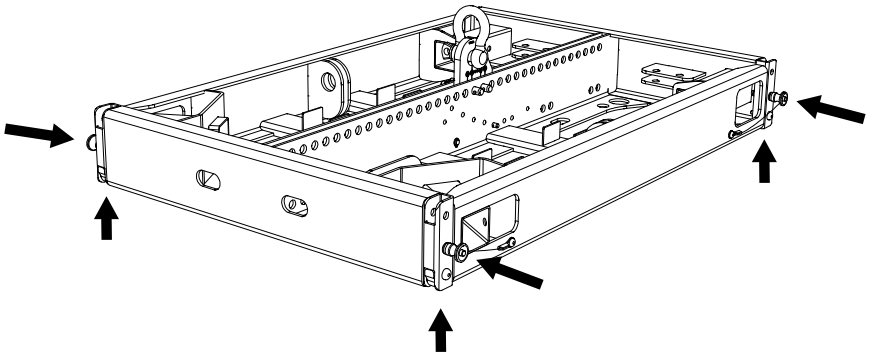

Figure 4.25.9 – VERA RF600 rigging frame

WARNING

18. Actuate the chain hoist and lower the VERA RF600 rigging frame carefully into the CaseRF600 transport case.

19. Remove the hook of your chain hoist from the shackle of the VERA LA900 load adapter, which is mounted on the VERA RF600 rigging frame.

20. Attach the cover to the CaseRF600 transport case.

NOTE

21. Release the locking levers on all castors with your foot.

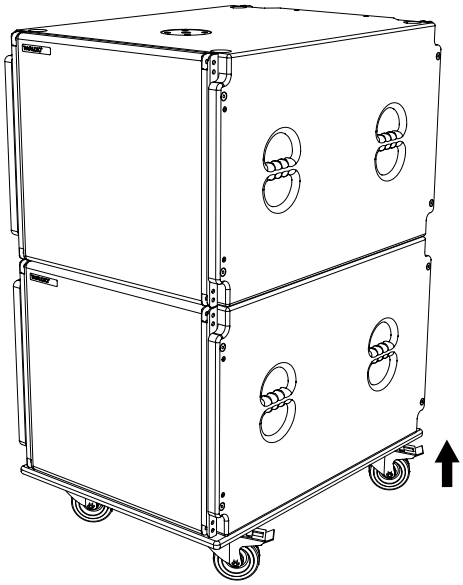

Figure 4.25.10 – VERA S32 loudspeaker on dolly

NOTE

22. Pull the Cover2S32 cover over the VERA S32 speakers.

4.26 De-rigging a flown mixed system with VERA20 and VERA S32 loudspeakers

To de-rig up the flown system with VERA20 and VERA S32 loudspeakers, proceed as follows:

WARNING

1. Please note that de-rigging the VERA RF600 rigging frame always requires two persons!

NOTE

2. Prepare the required number of QDB18 transport dollies plus Cover2S32 covers, VERA DLV20 dollies and Cover4V20 covers in advance.
3. Depending on the size of your system setup, remove the bottom speaker cords. Then proceed to remove the remaining speaker cables.

WARNING

4. Above all, make sure that no persons are directly within the danger zone or in its immediate vicinity when the system structure is lowered!

WARNING

5. Make sure that there no diagonal pull forces are applied to the system structure during de-rigging!

WARNING

6. De-rig the VERA20 loudspeakers as described in section 4.24.

WARNING

7. Use a chain hoist to lower the VERA S32 loudspeakers to the floor.
8. Remove all lower quick-locking pins on the box link connectors.

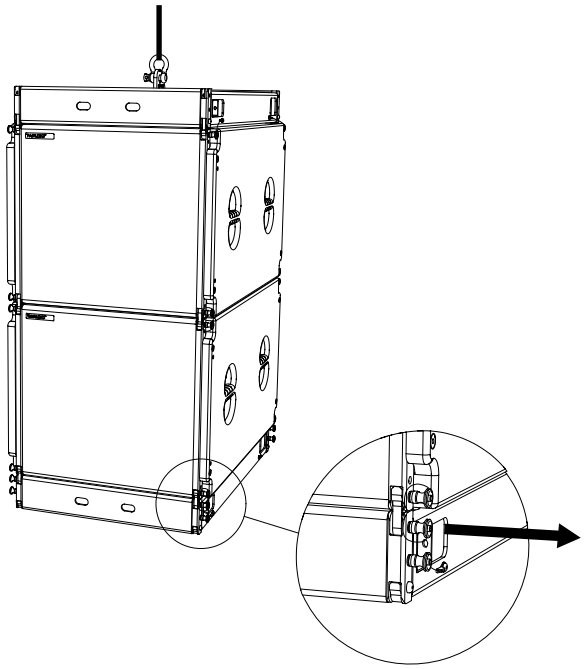

Figure 4.26.1 – second VERA RF600 rigging frame

WARNING

9. Use a chain hoist to lift the VERA S32 loudspeakers until they hang freely.

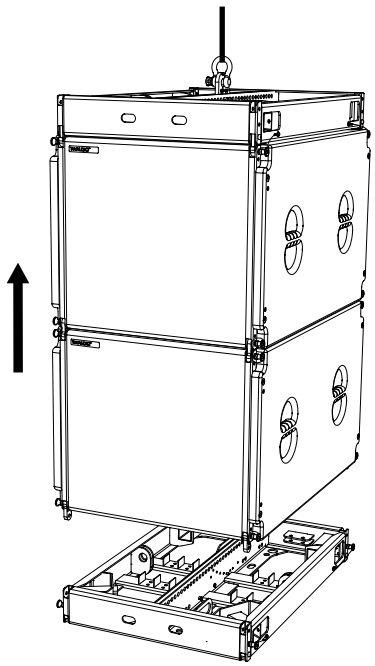

Figure 4.26.2 – second VERA RF600 rigging frame

WARNING

10. Remove the secondary box link connector quick-locking pins (and by doing so, all box link connectors).

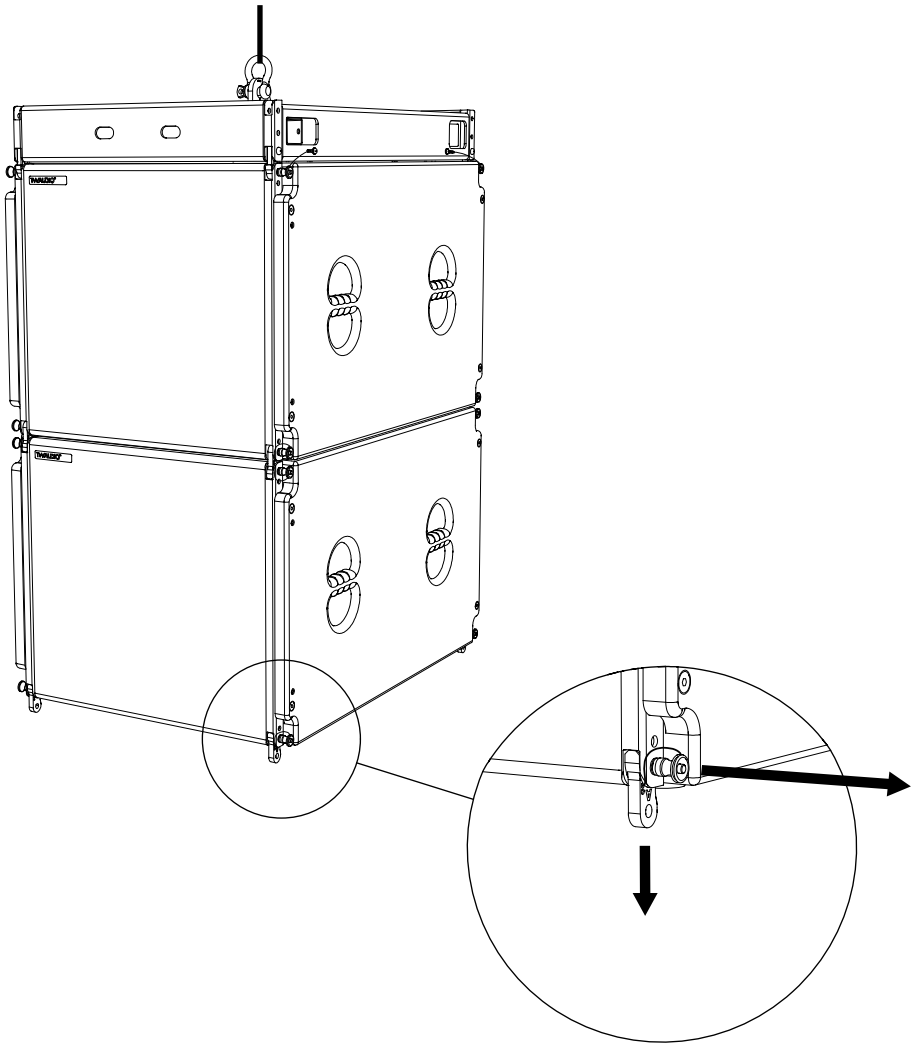

Figure 4.26.3 – Removing the box link connectors

WARNING

11. De-rig the VERA S32 loudspeakers as described in section 4.25.

5. Transport and Storage

Due to the VERA RF600 rigging frame weighing over 20 kg [44 lbs.], two persons are required to handle and transport the unit.

NOTE

When transporting and storing the unit, it is important to ensure that the surface of the rigging frame are not damaged. Moisture can penetrate where steel surfaces are exposed by scratches and result in corrosion.

This is why the product should be transported and stored in a safe, careful, dry and largely dust-free manner.

The following accessory parts for the rigging frame are available from TW AUDiO:

- VERA LA900 (load adapter with shackle)
- VERA ORF900 (Outrigger)
- VERA LAS900 (angle sensor set)

The following transport and storage accessories are available from TW AUDiO:

- CaseRF600 (flight case for two VERA RF600 units)

The original packaging is unsuitable as permanent storage and transport packaging.

6. EC Declaration of Conformity

Copy and translation of the original CE Conformity Declaration:

We hereby declare that the below-referenced components by virtue of their design and construction, and in the configuration placed on the market by us, satisfy the safety and health requirements of the applicable EC directives. This declaration becomes invalid in case of modifications that have not been approved by us.

This declaration applies to the following components

• VERA RF600

as well as all model variants based on these, provided that they correspond to the original factory models and have not been technically modified in any way.

Applicable directives:

• 2001/95/EG

Applicable national standards and technical specifications:

• DIN EN 18 800
• DIN EN ISO 12 100
• DGUV Vorschrift 17 und 18

Berlin, Germany, January 1st, 2021

Bernhard Wüstner

7. Disposal

If you have any question regarding the disposal of used devices, please contact us under the following telephone number:

+49 (0) 71 41 - 48 89 89 0

In countries outside of the European Union, comply with local regulations.

TWAMBO GmbH
Karl-Hofer-Str. 42
14163 Berlin
Germany

Phone: + 49 (0) 71 41-48 89 89 0
Fax: + 49 (0) 71 41-48 89 89 99
E-Mail: info@twaudio.de
WWW: www.twaudio.de